STANISCI DESIGN

Table of Contents

FAQ	*Common Questions*	*3*
	Materials & Construction	*4*
	Available Wood Species	*5-6*
	Base Styles	*7*
	Base Molding Options	*8*
	Framing Bead and Panel Raises	*9*
	Free-Standing vs. In-Series	*10*
	Online Quoting System – New	*11*
	TFL, Thermally Fused Laminates – Preview – AVAILABLE SUMMER 2025	*12*
WOOD RANGE HOODS	*All Hood Series – See next page for complete list*	
	Bedford (BXD) – NEW	*19-20*
	Bristol (BX) – new Kerf-Cut option	*21*
	ER Showcase (ER200, ER300, ER400, ER500, ER600) – NEW	*37-38*
	Saddlebrook (SB100) – NEW	*83-84*
	Victoria (VX) - NEW	*87-88*
VENTILATION	*Stainless Base w/ Baffle Filters (SS-BASE) – NEW FINISHES*	*97-98*
	Stainless Base w/ Baffle Filters (SS-BASE) – Specs	*99-100*
	Pro Mesh (PML) Vents – Specs	*101-102*
	Pro Baffle (PBL) Vents – Specs	*103-104*
	PML – PBL – SS-BASE – Duct Height Guide	*105*
	Imperial Premium (IPL) Vents – Specs	*107-108*
	Imperial Standard (ISL) Vents – Specs	*109-110*
	IPL – ISL – Duct Height Guide	*111*
	General Vent Guidelines	*112*
MODIFICATIONS/ ACCESSORIES	*Removable Options*	*113-115*
	Curved and Straight Battens	*116*
	Applied Hardwood and Molding Wraps	*117*
	Anvil Finish, Anvil Curved/Straight Battens, Applied Hardwood & Molding Wraps	*119-122*
	Sorrento Supports – Spice Rack Pull-Outs	*123*
	Corbels	*124-125*

700 South Glaspie Street • Oxford, MI 48371 • (248) 572-6880 • email: sales@wood-hood.com • www.wood-hood.com

Copyright 2026 Stanisci Design all rights reserved

STANISCI DESIGN

Range Hood Index

	Axton (AX-Series)	*13-14*
	Ashland (A-Series)	*15-16*
	Birmingham (B-Series)	*17-18*
NEW – Available April 2025	*Bedford (BXD-Series)*	*19-20*
NEW OPTION – Available Now	*Bristol (BX-Series)*	*21-22*
	Britney (BXV-Series)	*23-24*
	Cambridge (C-Series)	*25-26*
	Charlotte (CX-Series)	*27-28*
	Dalton (D-Series)	*29-30*
	Elevation (E-Series)	*31-32*
	Elegance (E200-Series) previously named: E2	*33-34*
	Eastland (E300-Series) previously named: E3	*35-36*
NEW –Available Now	*Erwin (ER200) – NEW*	*39-40*
NEW –Available Now	*Erie (ER300) – NEW*	*41-42*
NEW –Available Now	*Ericson (ER400) – NEW*	*43-44*
NEW –Available Now	*Erdahl (ER500) – NEW*	*45-46*
NEW –Available Now	*Ernston (ER600) – NEW*	*47-48*
	Fanfare (FX200-Series) previously named: FX2	*49-50*
	Foxcote (FX300-Series) previously named: FX	*51-53*
	Georgetown (G-Series)	*55-56*
	Thompson (GT-Series) previously named: T	*57-58*
	Hartford (H-Series)	*59-60*
	Huntington (H2-Series)	*61-62*
	Island (I-Series)	*63-64*
	Jacksonville (J-Series)	*65-66*
	Kingston (K200-Series) – NEW	*67-68*
	Kilgore (K300-Series) - NEW	*69-70*
	Lexington (L-Series)	*71-72*
	Lincoln (L2-Series)	*73-74*
	Madison (M-Series)	*75-76*
	Naples (N-Series)	*77-78*
	Plymouth (P-Series)	*79-80*
	Quebec (Q-Series)	*81-82*
NEW –Available Now	*Saddlebrook (SB100-Series) – NEW*	*83-84*
	Springfield (S-Series)	*85-86*
NEW – Available September 2025	*Victoria (VX-Series)*	*87-88*
	Washington (W-Series)	*89-90*
	Xavier (X-Series)	*91-92*
	Zenith (Z200)	*93-94*

700 South Glaspie Street • Oxford, MI 48371 • (248) 572-6880 • email: sales@wood-hood.com • www.wood-hood.com

Copyright 2026 Stanisci Design all rights reserved

FAQ

COMMON QUESTIONS

BUILDING CODES - Each municipality has their own building codes. Those codes will supersede any recommendations made in this catalog. Please refer building code questions to your local inspector since they will be responsible for the interpretation of the code.

FINISHING – Stanisci Design does not offer any finishing, and are sanded to 180 grit. Hoods can be drop-shipped into the kitchen dealer or cabinet manufacturer you have specified.

PANELS – When ordering a hood with a door – you can pick any of the Framing Bead choices with any of the Panel Raises. For example: a shaker style door would be #445 / Flat #1997. See FAQ Page for available profile choices.

MOLDINGS – Many hood designs are available with several different molding styles: #1 Classical, #2 Simple or #3 Basic. Molding is along the base of hood – not the top crown. Top crown is supplied in field.

HOOD HEIGHT – Stanisci hoods should be mounted a minimum of 30" above the cooking surface (or 66" from the floor) unless the range manufacturer specifies more distance is needed.

CUSTOM SIZES – Stanisci hoods are built-to-order based on your specifications. Each hood series is offered in a range of standard sizes, or you can select an in-between size (custom widths may require an additional fillers charge).

PAINT GRADE – When choosing Paint Grade – please review specifications on the FAQ page for Paint Grade Materials. This information page will detail hood body construction and use of Hybrid Doors for this species. Maple is a stain grade species and **not** intended for painted applications. Finish issues related to painting Maple are not warrantable.

RENDERINGS - Libraries are available for most rendering software. See 'Rendering Software Libraries' of our website to download latest 2020 library, and instructions for accessing AutoKitchen and ProKitchen libraries. For other rendering software, please reach out to us for information.

MODIFICATIONS & ACCESSORIES – Please review the Modifications & Accessories section to see available options such as various Removable Options, Wood Battens, Sorrento Spice Racks and Corbel offerings.

VENTILATION OPTIONS - We have standard liners, Stainless Mesh and Stainless Baffle liners from 300-1200 cfm. We can also custom design hoods around most customer supplied vents.

LEAD TIMES – Lead times range from 2 weeks for straight hoods, and 3 weeks for hoods with curve(s) and/or door panels. Lead times do not include shipping.

SHIPPING/ FREIGHT- Wood hoods ship LTL Freight in re-enforced crates, and any ventilation will be strapped to the top. Ventilation that ships separate from the wood hood is shipped Ground or LTL Freight. See ventilation specifications pages for specific details

SALES - Stanisci Design hoods are sold wholesale only exclusively to cabinetry professionals. Retail customers are welcome to reach out to us for questions, however we will not discuss pricing and order details.

TSCA / CARB - Our hoods are TSCA /CARB compliant and will come with all appropriate labels.

700 South Glaspie Street • Oxford, MI 48371 • (248) 572-6880 • email: sales@wood-hood.com • *www.wood-hood.com*

Copyright Stanisci Design 2026 rights reserved

FAQ

Materials & Construction

Stanisci Design uses only the finest materials. Range hoods often become the focal point of the kitchen. All solid wood components are hand selected for color. All Stanisci Design Products are TSCA (C.A.R.B) compliant. Hoods are sanded to 180 grit, ready to be finished.

¾" plywood back stretchers.
All structural parts are ¾" plywood

Doweled construction for tight even seams

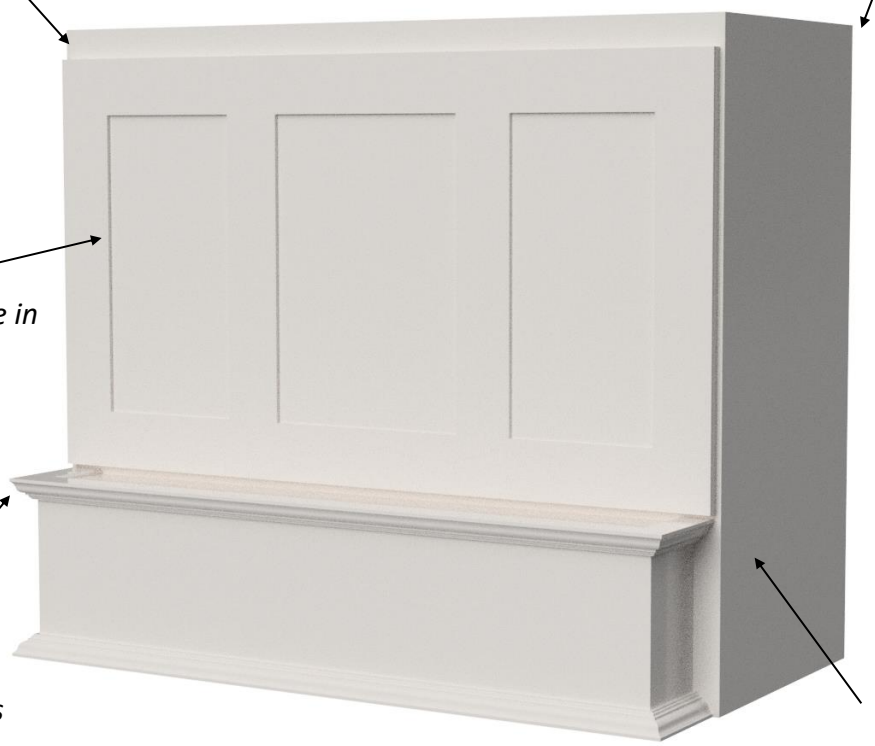

All door components are made in house to control color and consistency

Distinctive hardwood moldings available in three designs

Hood sides are 3/4" veneer core A faces or MDF/HDF.

MADE IN U. S. A.

MADE IN MICHIGAN MADE IN

700 South Glaspie Street • Oxford, MI 48371 • (248) 572-6880 • email: sales@wood-hood.com • www.wood-hood.com

Copyright 2026 Stanisci Design all rights reserved

Paint Grade Materials

The specifications below will provide information and define our Paint Grade species offering. This material selection is made from the best products available in the market and will give you superior results when painting.

Hybrid Hood – Paint Grade will be constructed using for the body of the hood, 1/2” thick MDF or HDF with no veneer thus providing a smooth surface to paint. We are also utilizing a 3/4” thick plywood with an 1/8” HDF (high density fiber) outer layer, commonly referred to as a Combi Core. Both materials present a smooth surface to finish and are considered the best materials on the market for painting. All molding and hardwood pieces will continue to be Paint Grade Hard Maple. All structural parts will continue to be 3/4” thick veneer core plywood.

Superior Surface for curved hoods – We use a bendable material exclusively designed for painting on all our curved hoods. This material is referred to as Superior Surface. It will be used on the curved section of the hood. This is a paintable man-made material which is impregnated with resin. This is a proprietary material which we have worked with our suppliers to develop for our curved hoods. It is very smooth, stable and has great adhesion.

Hybrid Doors – Doors will be constructed with a Paint Grade Hard Maple frame and MDF panels – raised or flat panels. Hybrid center panels have been tested extensively in the market and have proven to be effective in providing a more durable and superior product for painting. The machining on the hybrid MDF panel profiles is just as precise and clean cut as with solid wood panels. The Hybrid MDF panel provides a more stable product that does not expand and contract like a solid wood center panel. The elimination of center panel shrinking virtually eliminates raw material showing along the outside of a center panel as the seasons change. Eliminating expansion of the center panel also helps to reduce hairline cracks that may develop in the mortise and tenon joint of the door framing.

Paint Grade:

Hood/Cabinet Sides: 3/4” thick Combi Core Plywood

Mitered Portions: 1/2" thick MDF/HDF

Curved Sections: Superior Surface

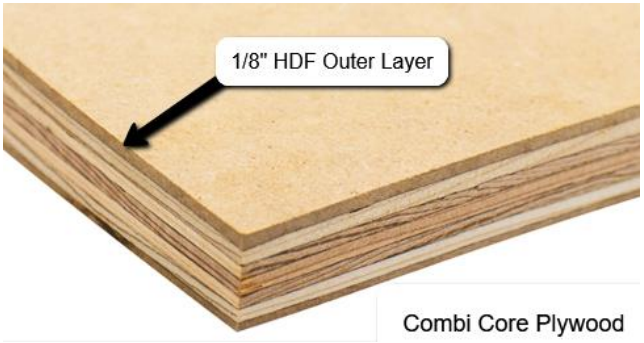

Copyright 2026 Stanisci Design all rights reserved

Maple is hard and heavy with good strength properties, in particular it's high resistance to abrasion and wear. The raw wood color ranges from near white to a dark reddish brown. The wood has a close fine texture and is generally straight grained. Maple is stain grade Maple & **not** intended for Painted Applications. Finish issues related to painting Maple are not warrantable. Please use Paint Grade for all painted applications.

Alder is extremely soft hardwood of medium density. Colors range from light brown with a yellow tinge to light brown with a reddish tinge. Alder is fairly straight grained with a uniform texture. This wood may have pin knots and mineral streaks. Mineral streaks and other natural variations help create the personality of this product. **Rustic Alder** material will allow for varying size knots & other sound characteristics including mineral streaks. Both sapwood & heartwood can be present in varying amounts. Rustic Alder veneers will contain knots / voids which expose the backing material of the veneer. The adhesive from the veneer being applied to the backer will seal the face of the backing material, finish will typically not adhere. This should be considered when finishing.

Hickory is a very hard, very heavy and dense hardwood which demonstrates extreme variations in color from nearly white to dark brown. Grain patterns can be bold and prominent with irregular characteristics that are associated with tree growth. Burls, water stains, mineral streaks and sound knots are typical and are not considered defects.

Cherry is considered a medium density wood with moderate weight and strength. The heartwood of cherry ranges from light to dark reddish brown while the sapwood may be near white. The heartwood darkens with age and light exposure, this change can be dramatic. Cherry has a fine and uniform grain pattern with a smooth texture. Acceptable characteristics include brown flecks, natural gum pockets, mineral streaks and pin knots.

Walnut is an exceptionally beautiful and stable hardwood whose traits are strongly defined throughout the history of woodworking. Grain patterns range from straight to varied; providing striking depth when finished in natural tones. This specie's coloration fluctuates from dark brown to a purplish black.

Plain Sawn White Oak is White Oak lumber is characterized by uneven cathedral grain that would be similar in appearance to Red Oak grain patterns. Plain Sawn White Oak however has a neutral light to medium brown color sometimes with an olive hue. Known for strength and durability.

Quarter Sawn White Oak is cut radially (90-degree angle from the growth rings) instead of with the grain and produces vertical and uniform grain lines that are straight, tight and run the length of the board, sometimes creating prominent ray flecks. Structural benefits include that it reduces twisting, warping and cupping, holds finishes better, and does not allow liquids to readily pass through it.

Rift Sawn White Oak is specifically cut White Oak lumber where logs are quartered, then sliced perpendicular to the growth rings of the tree. The resulting grain pattern is relatively straight, but the spacing between the grain will vary. This specie will have the normal color range of other White Oak variations, but the method of cutting eliminates cathedral grain, but allows limited amounts of mineral and pin knots to be present.

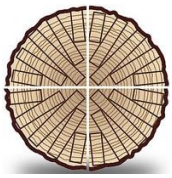

Red Oak / Quarter Sawn Red Oak is a hard, heavy wood which results in great wear resistance. Color ranges from white to light brown to a pinkish reddish brown. Red Oak will be plain sliced, Quarter Sawn Red Oak will be quarter sawn cut.

700 South Glaspie Street • Oxford, MI 48371 • (248) 572-6880 • email: sales@wood-hood.com • *www.wood-hood.com*

Copyright 2026 Stanisci Design all rights reserved

STANISCI DESIGN

FAQ

Base Styles Offered

See hood series page for details.

Standard Base

PL Base #3 Basic

HW Base

RS Base

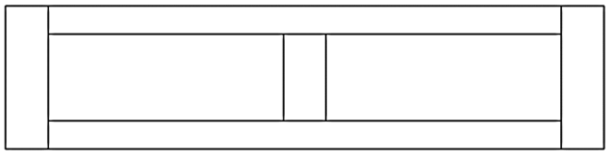

RSS Base

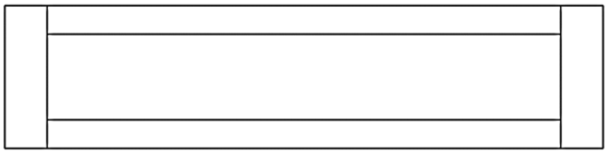

RA Base

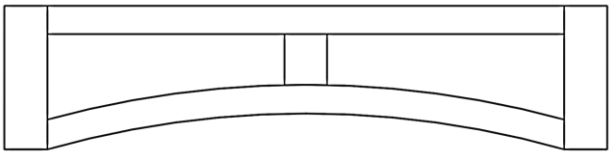

DP2 Base

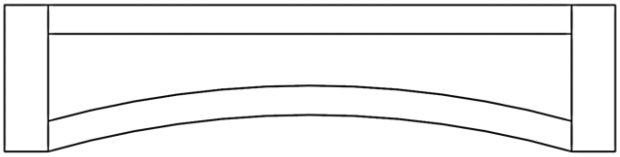

SL Base

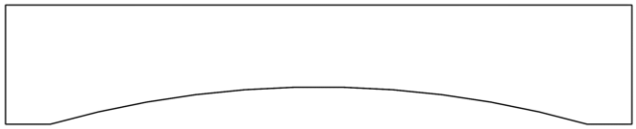

DP1 Base

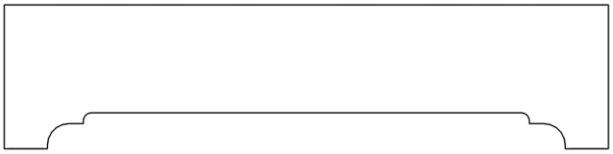

METAL BAFFLE BASE – available in 17 different finishes
(see vent section for details)

700 South Glaspie Street • Oxford, MI 48371 • (248) 572-6880 • email: sales@wood-hood.com • www.wood-hood.com

Copyright 2026 Stanisci Design all rights reserved

STANISCI DESIGN

FAQ

Base Moldings Offered

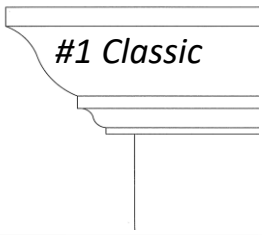
#1 Classic

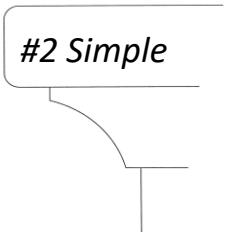
#2 Simple

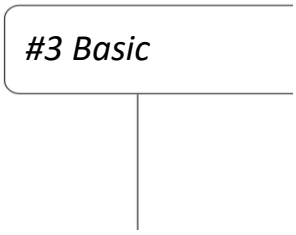
#3 Basic

A, E, G, GT, H, H2, I, J, S, W (excludes HW or SS models)

PLEASE SELECT A MOLDING OPTION BELOW

☐ *#1 Classic* ☐ *#2 Simple* ☐ *#3 Basic*

C, CX, E200, FX200, P, Z200 (excludes HW or SS models)

#3 BASIC IS DEFAULT MOLDING, #1 CLASSIC OR #2 SIMPLE AVAILABLE BY REQUEST.

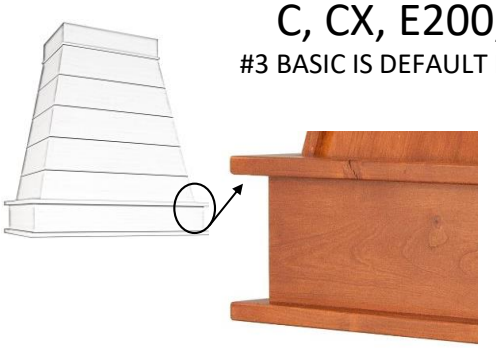

#3 Basic - DEFAULT ☐ *#1 Classic* ☐ *#2 Simple*

THESE MODELS COME WITH #3 BASIC MOLDING UNLESS AN ALTERNATE OPTION HAS BEEN SELECTED

B, D, L, N, XRA (excludes HW or SS models)

PLEASE SELECT A MOLDING OPTION BELOW

☐ *#1 Classic* ☐ *#2 Simple*

700 South Glaspie Street • Oxford, MI 48371 • (248) 572-6880 • email: sales@wood-hood.com • www.wood-hood.com

Copyright 2026 Stanisci Design all rights reserved

STANISCI DESIGN

FAQ

Framing Bead and Panel Raises

FRAMING BEAD

- ☐ 441
- ☐ 443
- ☐ 444 *(WITH 'FLAT/1997' PANEL ONLY)* — 1/8"
- ☐ 445 — 3/8"
- ☐ 446
- ☐ 447
- ☐ 448
- ☐ 450

PANEL RAISE

- ☐ BASIC/ 1991
- ☐ OGEE/ 1995
- ☐ BEAD/ 1996
- ☐ FLAT/ 1997
- ☐ COVE/ 1998

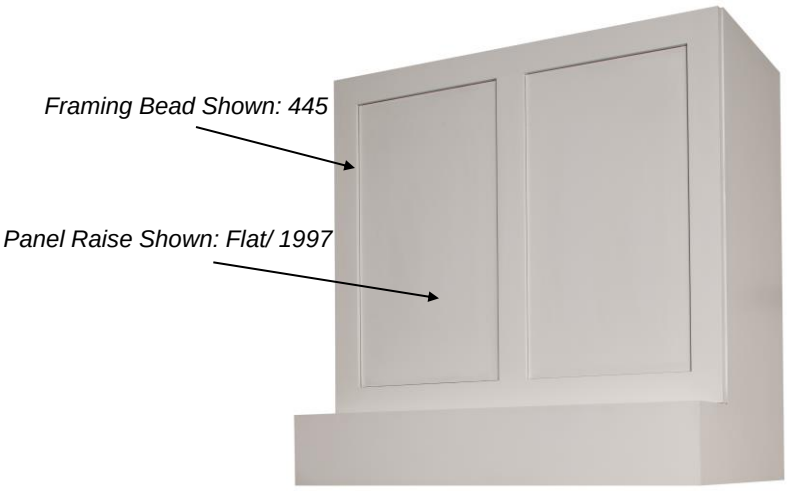

700 South Glaspie Street • Oxford, MI 48371 • (248) 572-6880 • email: sales@wood-hood.com • www.wood-hood.com

Copyright 2026 Stanisci Design all rights reserved

STANISCI DESIGN

FAQ

Free-Standing vs. In-Series

FREE – STANDING HOODS

Free-standing range hoods are mounted to the wall above the cooking surface, and stand alone from any adjacent cabinetry. These hoods will not have flush sides, and typically have design elements or decorative accents that prohibit a cabinet from being installed flush against the sides.

FREE-STANDING MODELS: AX, B, BXHW, C, CX, D, E, E200, ER200, ER600, FX200, G, GT, K200, VX

IN-SERIES HOODS

In-Series hoods are mounted to the wall above the cooking surface, and have completely flush sides. Moldings and decorative accents will not extend past the sides. This allows cabinetry to be installed on either side of the range hood to achieve a continuous design, but can also be used in a stand-alone design. .

IN-SERIES MODELS: A, BXD, BX, E300, ER300, ER400, ER500, FX300, J, K300, L2, M, N, P, Q, S, SB100, W, XRA, Z200

700 South Glaspie Street • Oxford, MI 48371 • (248) 572-6880 • email: sales@wood-hood.com • www.wood-hood.com

Copyright 2026 Stanisci Design all rights reserved

STANISCI DESIGN ALLMOXY

ONLINE QUOTING SYSTEM NOW AVAILABLE!

LINKS TO CREATE A NEW ACCOUNT AND ACCESS A FULL LIBRARY OF HELP VIDEOS ARE LOCATED AT THE TOP OF THE WOOD-HOOD.COM WEBSITE

CLIENT LOGIN (Allmoxy) | **Training Videos**

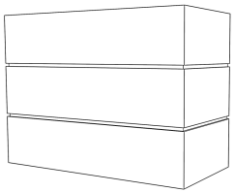
Axton – AX Series
(Free-Standing)

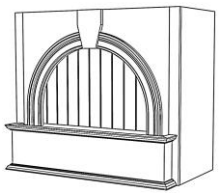
Ashland – A Series
(In-Series)

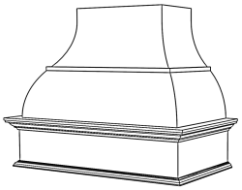
Birmingham – B Series
(Free-Standing)

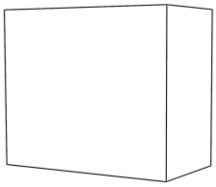
Bristol – BX Series
(Free-Standing)

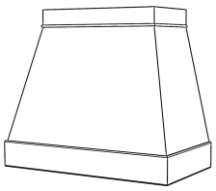
Cambridge – C Series
(Free-Standing)

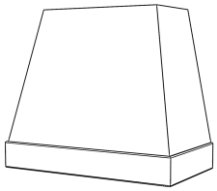
Charlotte – CX Series
(Free-Standing)

Dalton – D Series
(Free-Standing)

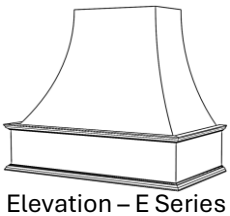
Elevation – E Series
(Free-Standing)

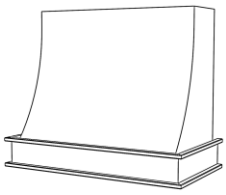
Elegance – E200 Series
(Free-Standing)

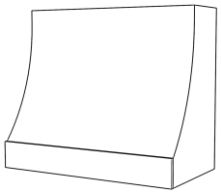
Eastland – E300 Series
(In-Series)

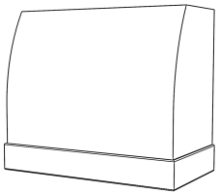
Erwin – ER200 Series
(Free-Standing)

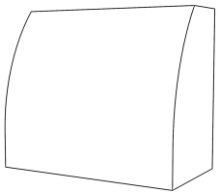
Erie – ER300 Series
(In-Series)

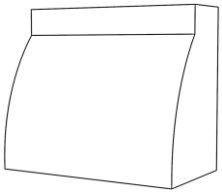
Ericson – ER400 Series
(In-Series)

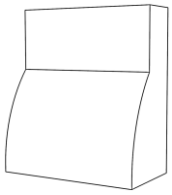
Erdahl – ER500 Series
(In-Series)

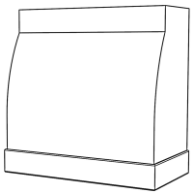
Ernston – ER600 Series
(Free-Standing)

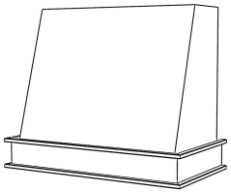
Fanfare – FX200 Series
(Free-Standing)

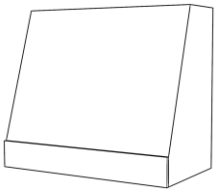
Foxcote – FX300 Series
(In-Series)

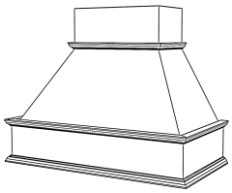
Georgetown – G Series
(Free-Standing)

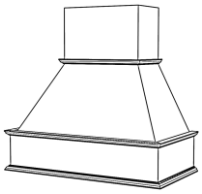
Thompson – GT Series
(Free-Standing)

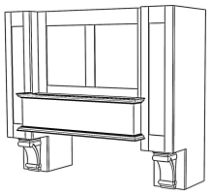
Hartford – H Series
(In-Series)

QUESTIONS? THE STANISCI DESIGN TEAM IS HERE!
EMAIL US AT SALES@WOOD-HOOD.COM
OR USE OUR NEW ONLINE CHAT AVAILABLE
THROUGH THE ALLMOXY QUOTING SYSTEM.

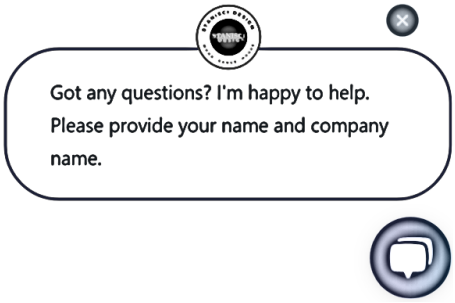

Copyright Stanisci Design 2026 rights reserved

STANISCI DESIGN

TFL PROGRAM PREVIEW
(THERMALLY FUSED LAMINATE)

AVAILABLE IN 16 FINISHES

NEW

Please review our Exclusive TFL spec book for information specifically related to these unique products and offerings

SUMMER 2025

EGGER

MORE FROM WOOD.

WHAT ARE THERMALLY FUSED LAMINATES (TFL) ?

Thermally fused laminate (TFL) is manufactured with enhanced visual and performance characteristics. Surface textures are created with steel press plates that emboss the decorative overlay to heighten the realism of wood grain. TFL has excellent scratch and wear resistance. Due to the performance, design flexibility, and cost advantages, TFL offers an excellent option for designers. TFL is made by fusing a resin-impregnated décor paper sheet directly to a substrate. Heat and pressure activate the resin in the saturated décor paper, creating a cross-linked bond with the substrate. This process fuses the décor paper to the substrate.

TFL creates a look and feel that is almost indistinguishable from solid wood or veneer. Ideal for hard-wearing or heavy-duty applications. TFL is durable, long lasting and easy to maintain. The TFL product is considered a green and environmentally friendly product. Information can be found at www.egger.com/ecofacts

WHAT IS THE LEAD TIME ON A TFL HOOD ?

Once your order is submitted and a sample has been approved,
you can expect your order to ship to you in approximately 4 weeks.

HOW DO I REQUEST SAMPLES ?

You can request a complete set of 4 x 6” TFL samples in all 16 finishes under the ‘Samples’ section in our online quoting system, or by emailing us at sales@wood-hood.com. The complete set of samples cost $97 and will be credited back to you on your first TFL order.

700 South Glaspie Street • Oxford, MI 48371 • (248) 572-6880 • email: sales@wood-hood.com • www.wood-hood.com

Copyright Stanisci Design 2026 rights reserved

Axton - AX Series

Free Standing

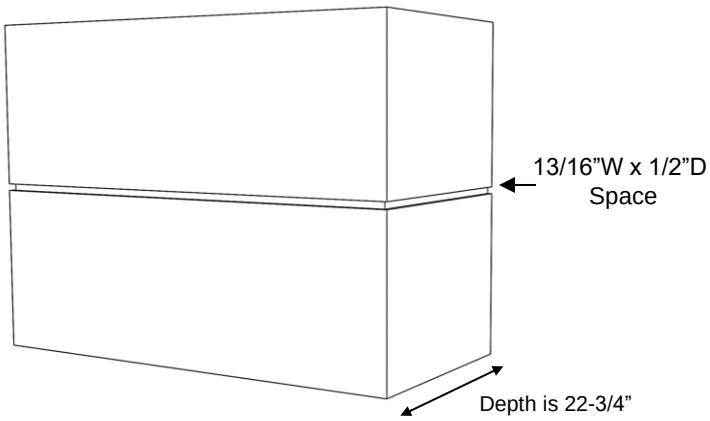

AX shown with 2 slats (AX-2)

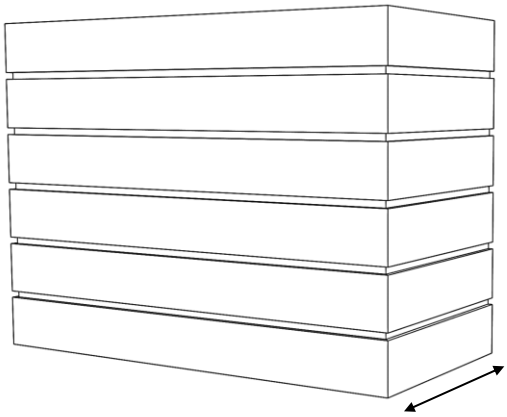

AX shown with 6 slats (AX-6)

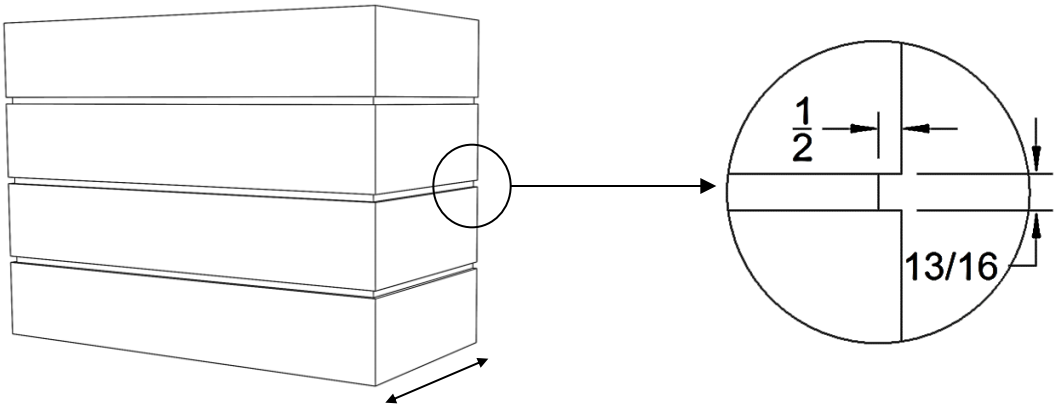

AX shown with 4 slats (AX-4)

AX Series

Standard Widths	31, 37, 43, 49, 55, 61 (Reduced widths available) *Minimum Width 31”
Standard Heights	24, 30, 36, 42, 48 (Reduced heights available)
Removable Options	Not Available
Standard assumptions	Slat spacing is 13/16” (designed to yield 3/4” W x 1/2” D space after finish applied.) All slats will be equal height Average weight could exceed 100 pounds. Hood must be properly anchored to the wall
Ventilation	Hood must be a minimum of 1” wider than available vent width. Example: To use a 36” vent model, the hood should be a minimum of 37” wide
Grain Direction	Horizontal

700 South Glaspie Street • Oxford, MI 48371 • (248) 572-6880 • email: sales@wood-hood.com • www.wood-hood.com

Copyright 2026 Stanisci Design all rights reserved

Axton - AX Series

Free Standing

Standard Heights: 24, 30, 36, 42, 48

AX - 2 Slat

AX-2 31
AX-2 37
AX-2 43
AX-2 49
AX-2 55
AX-2 61

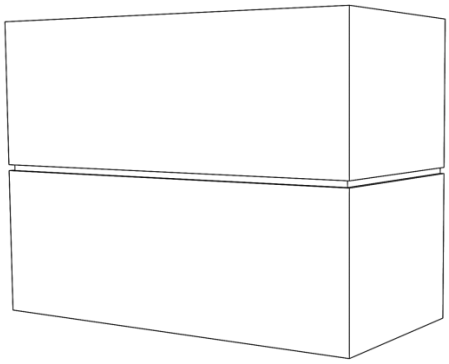

AX - 3 Slat

AX-3 31
AX-3 37
AX-3 43
AX-3 49
AX-3 55
AX-3 61

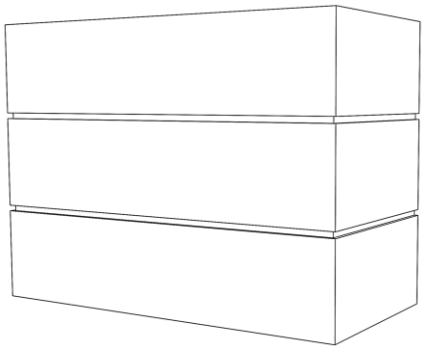

AX - 4 Slat

AX-4 31
AX-4 37
AX-4 43
AX-4 49
AX-4 55
AX-4 61

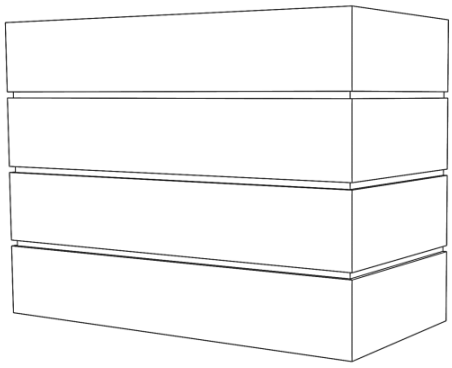

AX - 5 Slat

AX-5 31
AX-5 37
AX-5 43
AX-5 49
AX-5 55
AX-5 61

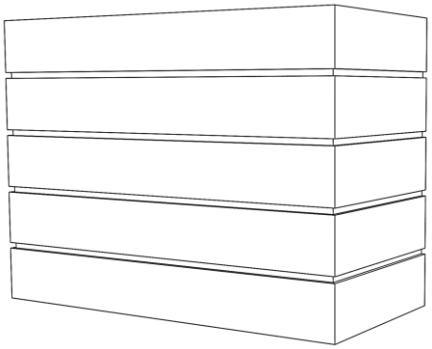

AX - 6 Slat

AX-6 31
AX-6 37
AX-6 43
AX-6 49
AX-6 55
AX-6 61

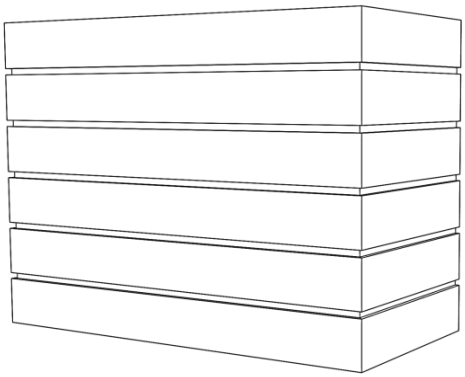

700 South Glaspie Street • Oxford, MI 48371 • (248) 572-6880 • email: sales@wood-hood.com • *www.wood-hood.com*

Copyright 2026 Stanisci Design all rights reserved

Ashland - A Series

In-Series

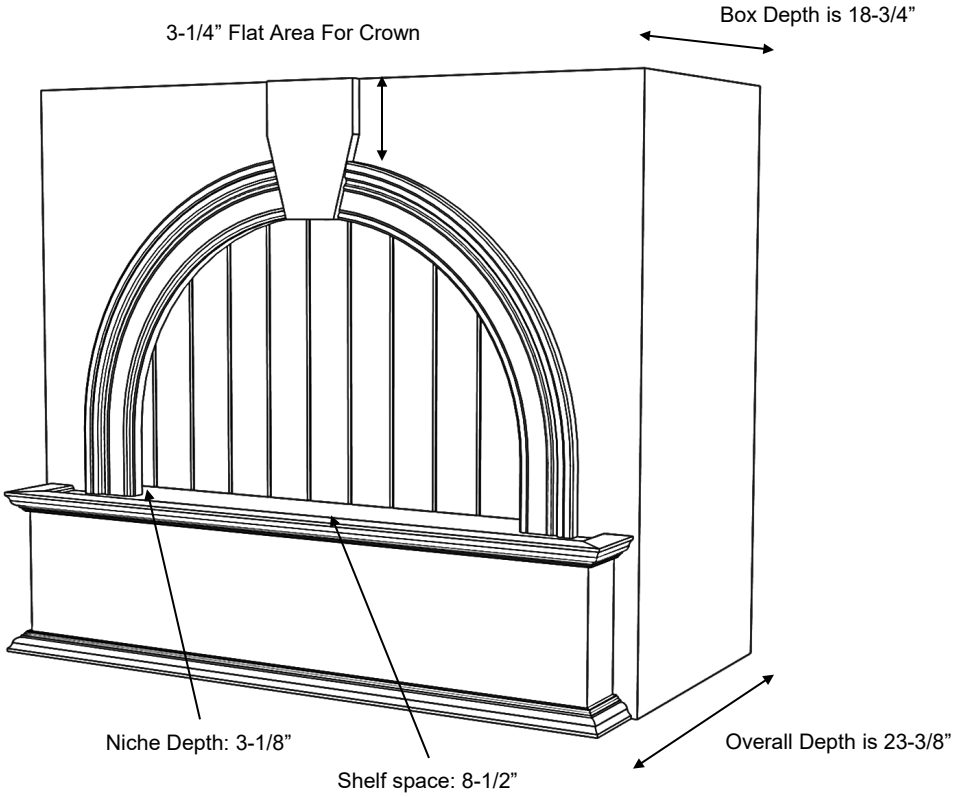

A Series shown with Standard Base (A)
and #1 Classic moldings

A Series

Standard Widths	33, 36, 39, 42, 45, 48, 51, 54, 57, 60, 63(Reduced widths available)
Standard Heights	30, 36, 42, 48 (Reduced heights available)
Removable Options	Removable Panel is standard (Two seams in beading to allow for access) Non-bead panel by request – will not be removable (NBNA) - see modifications section.
Ventilation	Hood must be a minimum of 3” wider than available vent width. Example: To use a 36” vent model, the hood should be a minimum of 39” wide.
Available Moldings	#1 Classic, #2 Simple, #3 Basic
Grain Direction	Vertical (Base is horizontal)

700 South Glaspie Street • Oxford, MI 48371 • (248) 572-6880 • email: sales@wood-hood.com • www.wood-hood.com

Copyright Stanisci Design 2026 all rights reserved

Ashland - A Series

In-Series

Standard Heights: 30, 36, 42, 48

A- Standard Base

A 33
A 36
A 39
A 42
A 45
A 48
A 51
A 54
A 57
A 60
A 63

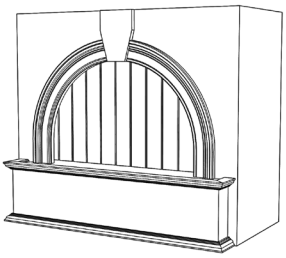

A- RS Base

ARS 33
ARS 36
ARS 39
ARS 42
ARS 45
ARS 48
ARS 51
ARS 54
ARS 57
ARS 60
ARS 63

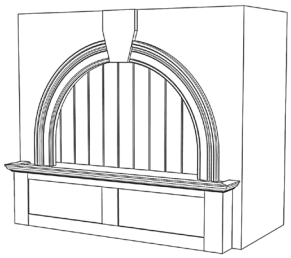

A- RSS Base

ARSS 33
ARSS 36
ARSS 39
ARSS 42
ARSS 45
ARSS 48
ARSS 51
ARSS 54
ARSS 57
ARSS 60
ARSS 63

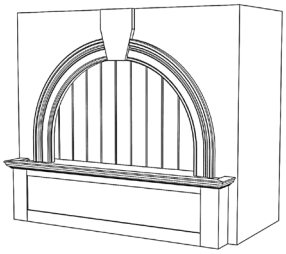

A- RA Base

ARA 33
ARA 36
ARA 39
ARA 42
ARA 45
ARA 48
ARA 51
ARA 54
ARA 57
ARA 60
ARA 63

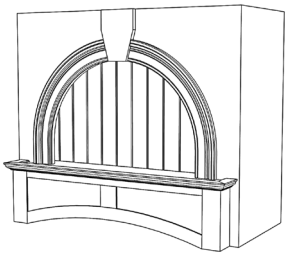

A- DP2 Base

ADP2 33
ADP2 36
ADP2 39
ADP2 42
ADP2 45
ADP2 48
ADP2 51
ADP2 54
ADP2 57
ADP2 60
ADP2 63

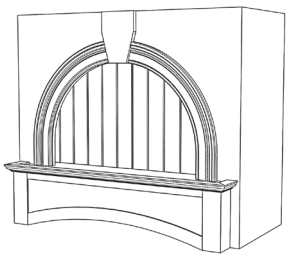

A- SL Base

ASL 33
ASL 36
ASL 39
ASL 42
ASL 45
ASL 48
ASL 51
ASL 54
ASL 57
ASL 60
ASL 63

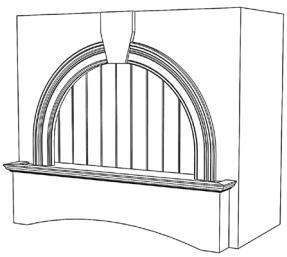

A- DP1 Base

ADP1 33
ADP1 36
ADP1 39
ADP1 42
ADP1 45
ADP1 48
ADP1 51
ADP1 54
ADP1 57
ADP1 60
ADP1 63

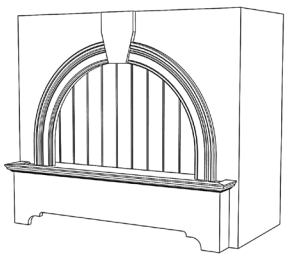

700 South Glaspie Street • Oxford, MI 48371 • (248) 572-6880 • email: sales@wood-hood.com • www.wood-hood.com

Copyright Stanisci Design 2026 all rights reserved

Birmingham - B Series

Free Standing

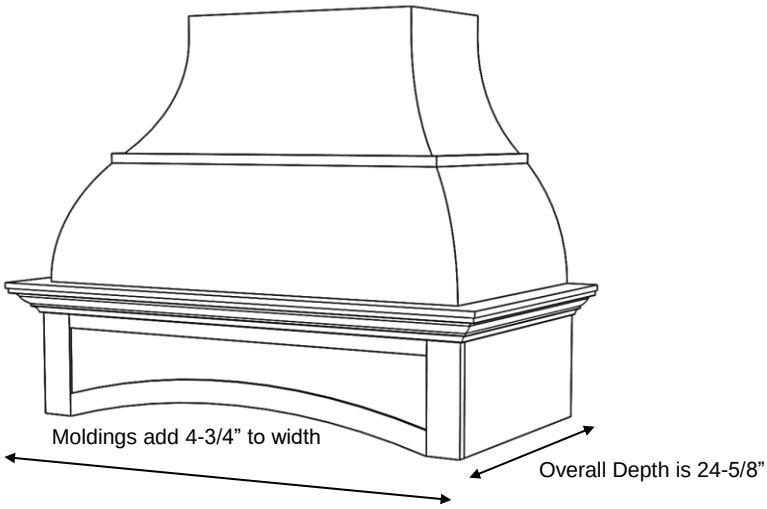

B Series shown with DP2 Base (BDP2) and #1 Classic moldings

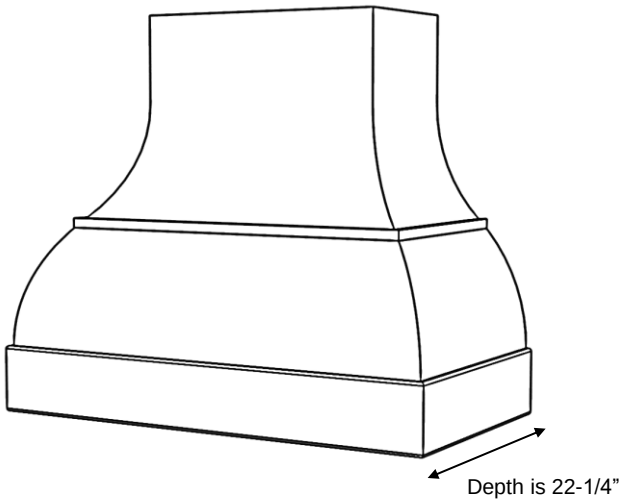

B Series shown with Hardwood Base (BHW)

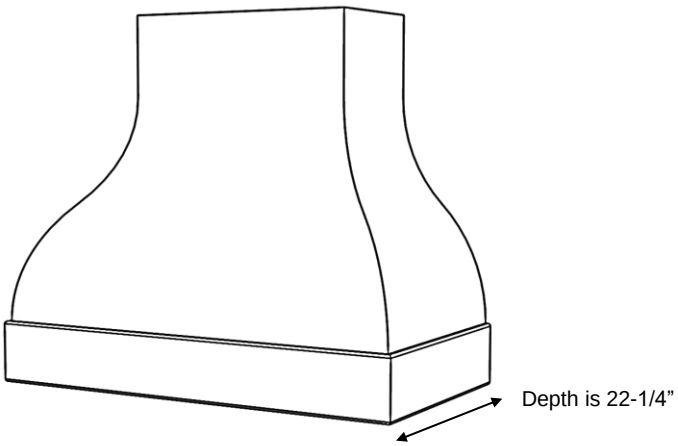

B Series shown with Hardwood Base (BHW) and R.U.M. option

B Series

Standard Widths	36, 42, 48, 54, 60 (Reduced widths available) *Minimum Width 36”
Standard Heights	30, 36, 42, 48 (Reduced heights available)
Removable Options	Removable Top (RT) – see modifications section.
Available Options	Remove Upper Molding - request R.U.M. option
Ventilation	Hood will be same width as available vent width. Example: To use a 36” vent model, the hood should be a minimum of 36” wide.
Available Moldings	#1 Classic, #2 Simple
Grain Direction	Vertical (Base is horizontal)

700 South Glaspie Street • Oxford, MI 48371 • (248) 572-6880 • email: sales@wood-hood.com • www.wood-hood.com

Copyright Stanisci Design 2026 rights reserved

Birmingham - B Series

Free Standing

Standard Heights: 30, 36, 42, 48

B- Standard Base

B 36
B 42
B 48
B 54
B 60

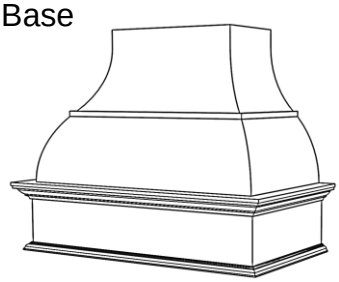

B- Hardwood Base

BHW 36
BHW 42
BHW 48
BHW 54
BHW 60

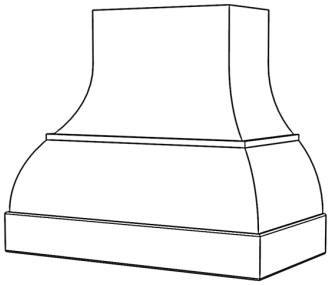

B- RS Base

BRS 36
BRS 42
BRS 48
BRS 54
BRS 60

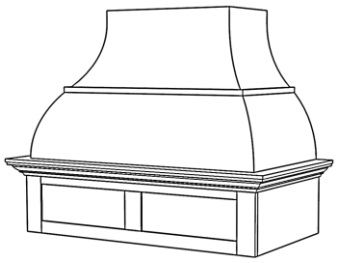

B- RSS Base

BRSS 36
BRSS 42
BRSS 48
BRSS 54
BRSS 60

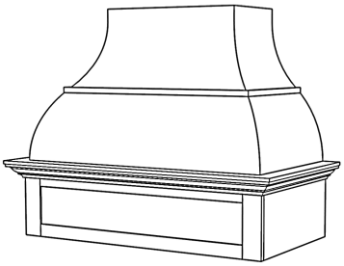

B- RA Base

BRA 36
BRA 42
BRA 48
BRA 54
BRA 60

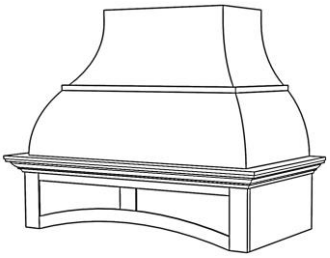

B- DP2 Base

BDP2 36
BDP2 42
BDP2 48
BDP2 54
BDP2 60

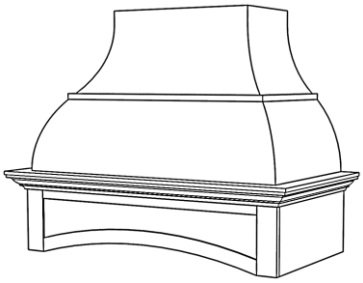

B- SL Base

BSL 36
BSL 42
BSL 48
BSL 54
BSL 60

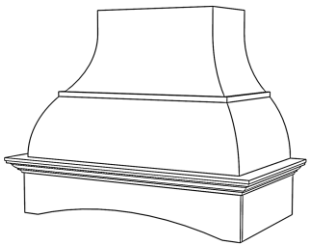

B- DP1 Base

BDP1 36
BDP1 42
BDP1 48
BDP1 54
BDP1 60

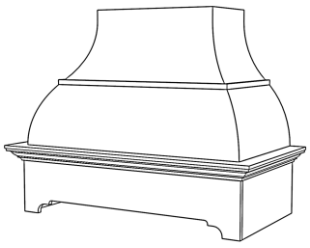

B- SS Base

BSS 36
BSS 42
BSS 48
BSS 54
BSS 60

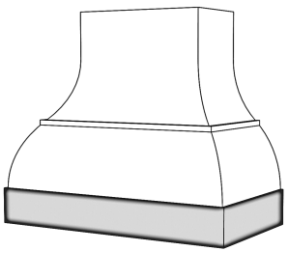

700 South Glaspie Street • Oxford, MI 48371 • (248) 572-6880 • email: sales@wood-hood.com • www.wood-hood.com

Copyright Stanisci Design 2026 rights reserved

Bedford - BXD Series

Free Standing

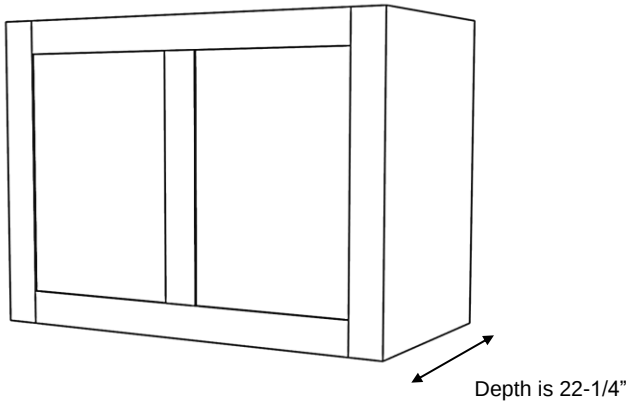

BXD Series (BXD)
(30” – 42” wide will have 2 center panels)

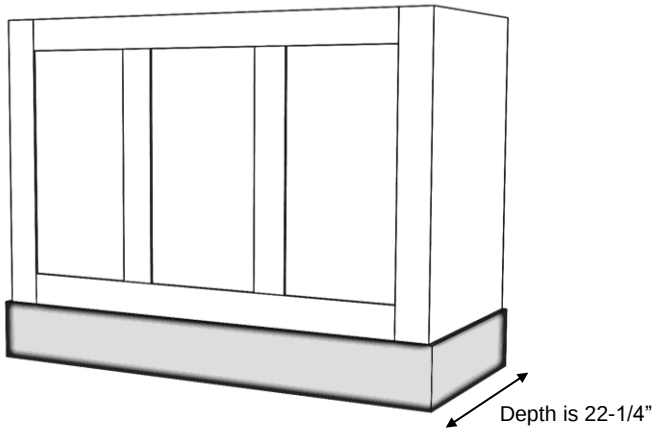

BXD Series shown with Stainless Steel Base (BXDSS)
(48” – 60” wide will have 3 center panels)

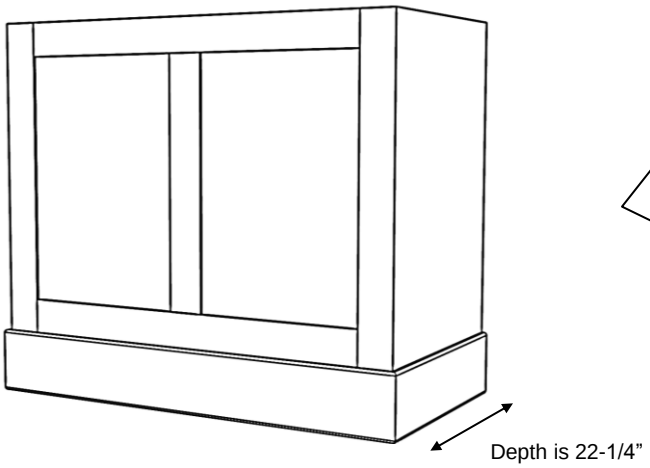

BXD Series shown with hardwood base (BXDHW)
(30” – 42” wide will have 2 center panels)

NEW

Available April 2025

BXD Series

Standard Widths	30, 36, 42, 48, 54, 60 (Reduced widths available) *Minimum Width 30”
Standard Heights	24, 30, 36, 42, 48 (Reduced heights available)
Removable Options	Removable Top (RT) available on BXDHW only– see modifications section.
Ventilation	Hood will be same width as available vent width. Example: To use a 36” vent model, the hood should be a minimum of 36” wide
Grain Direction	Vertical (Base is horizontal)

700 South Glaspie Street • Oxford, MI 48371 • (248) 572-6880 • email: sales@wood-hood.com • www.wood-hood.com

Copyright Stanisci Design 2026 rights reserved

Bedford - BXD Series

Free Standing

Standard Heights: 24, 30, 36, 42, 48

NEW

Available April 2025

BXD - Standard Hood

BXD 30
BXD 36
BXD 42
BXD 48*
BXD 54*
BXD 60*

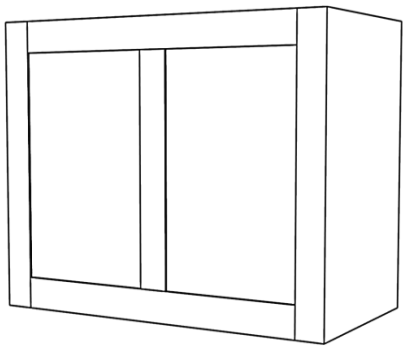

BXDHW – Hardwood Base

BXDHW 30
BXDHW 36
BXDHW 42
BXDHW 48*
BXDHW 54*
BXDHW 60*

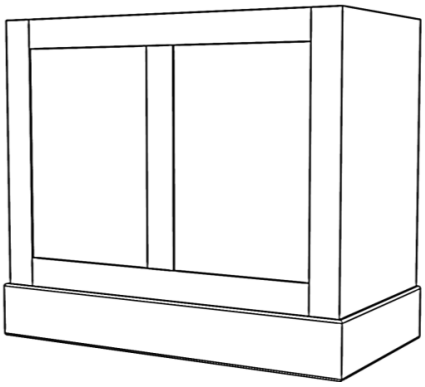

BXDSS – SS Base

BXDSS 30
BXDSS 36
BXDSS 42
BXDSS 48*
BXDSS 54*
BXDSS 60*

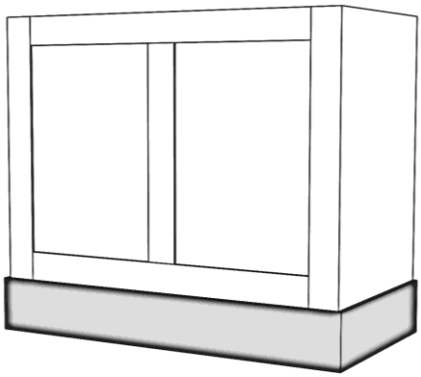

* There will be three panels rather than two, due to width of hood

700 South Glaspie Street • Oxford, MI 48371 • (248) 572-6880 • email: sales@wood-hood.com • www.wood-hood.com

Copyright Stanisci Design 2026 rights reserved

Bristol - BX Series

HORIZONTAL GRAIN

Free Standing

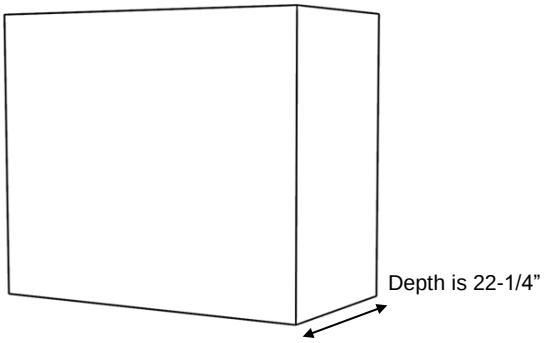

Standard BX Series (BX)

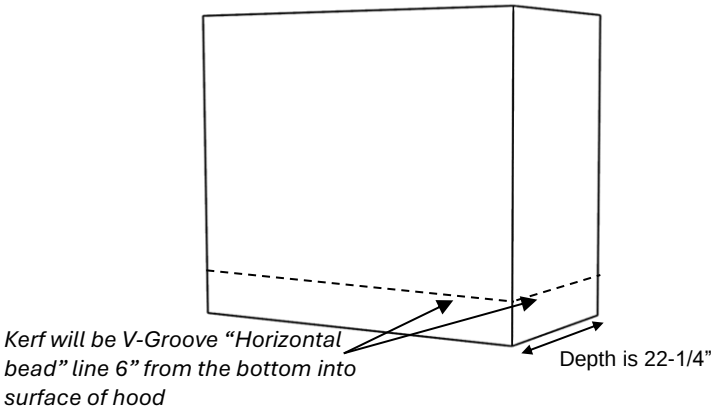

BX Series shown with Kerf Cut (BX-KCUT)

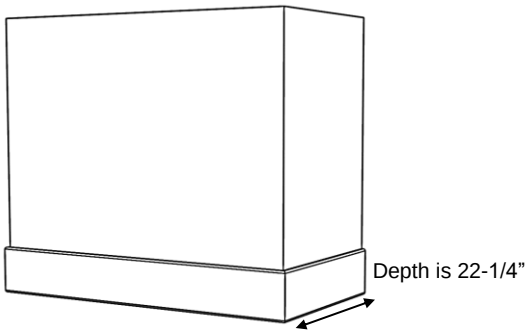

BX Series shown with Hardwood Base (BXHW)

Close up of V-groove “Horizontal bead” option, Same V-Groove used for Kerf Cut (KCUT)

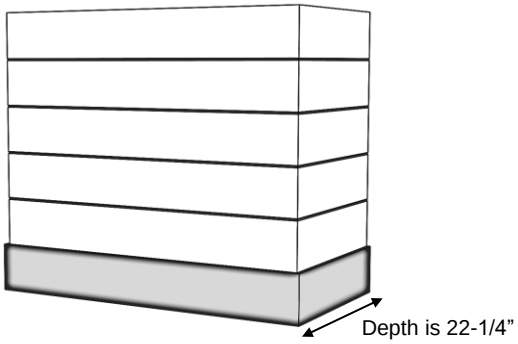

BX Series shown with Horizontal Beading and Stainless Steel Base (BXHBSS)

BX Series

Standard Widths	30, 36, 42, 48, 54, 60 (Reduced widths available) *Minimum Width 30”
Standard Heights	24, 30, 36, 42, 48 (Reduced heights available)
Removable Options	Removable Top (RT) available on BXHW or BXHWHB only– see modifications section.
Standard Assumptions	Kerf Cut (KCUT)– assumed placement is 6” from bottom
Available Options	Applied Molding Wrap – BX and BXHB only (See options page) Applied Hardwood Wrap (See options page)
Ventilation	Hood will be same width as available vent width. Example: To use a 36” vent model, the hood should be a minimum of 36” wide
Grain Direction	Horizontal

700 South Glaspie Street • Oxford, MI 48371 • (248) 572-6880 • email: sales@wood-hood.com • www.wood-hood.com

Copyright Stanisci Design 2026 rights reserved

Bristol - BX Series

Free Standing

Standard Heights: 24, 30, 36, 42, 48

BX- Standard Hood

BX 30
BX 36
BX 42
BX 48
BX 54
BX 60

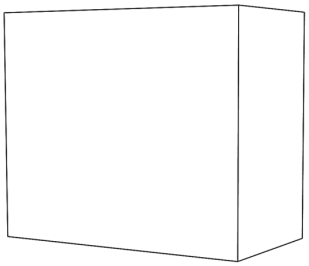

BX- Horizontal Beading

BXHB 30
BXHB 36
BXHB 42
BXHB 48
BXHB 54
BXHB 60

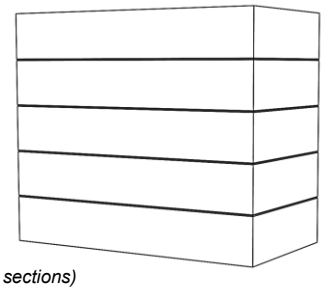

24" tall: 3 beads (4 sections)
30-36" tall: 4 beads (5 sections)
42-48" tall: 5 beads (6 sections)

BX- Hardwood Base

BXHW 30
BXHW 36
BXHW 42
BXHW 48
BXHW 54
BXHW 60

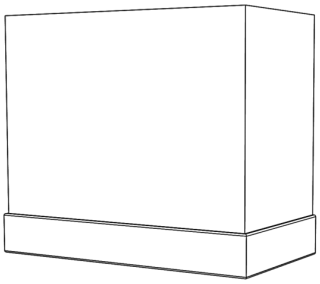

BX- Hardwood Base, Horizontal Beading

BXHWHB 30
BXHWHB 36
BXHWHB 42
BXHWHB 48
BXHWHB 54
BXHWHB 60

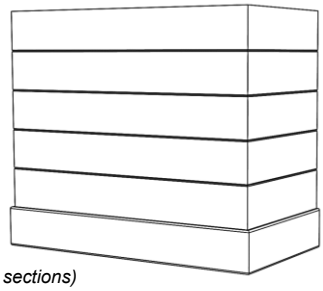

24-30" tall: 3 beads (4 sections)
36-42" tall: 4 beads (5 sections)
48" tall: 5 beads (6 sections)

BX- SS Base

BXSS 30
BXSS 36
BXSS 42
BXSS 48
BXSS 54
BXSS 60

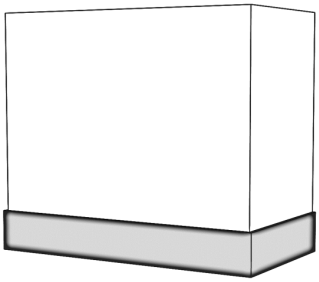

BX- SS Base, Horizontal Beading

BXSSHB 30
BXSSHB 36
BXSSHB 42
BXSSHB 48
BXSSHB 54
BXSSHB 60

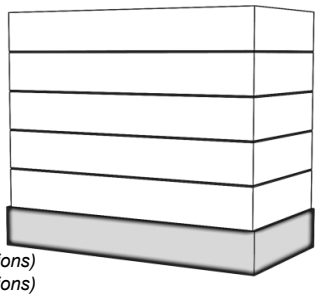

24-30" tall: 3 beads (4 sections)
36-42" tall: 4 beads (5 sections)
48" tall: 5 beads (6 sections)

BX- Kerf Cut

BX-KCUT 30
BX-KCUT 36
BX-KCUT 42
BX-KCUT 48
BX-KCUT 54
BX-KCUT 60

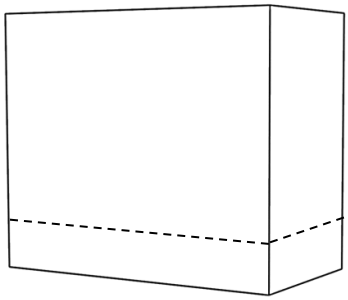

700 South Glaspie Street • Oxford, MI 48371 • (248) 572-6880 • email: sales@wood-hood.com • www.wood-hood.com

Copyright Stanisci Design 2026 rights reserved

Britney - BXV Series

VERTICAL GRAIN

Free Standing

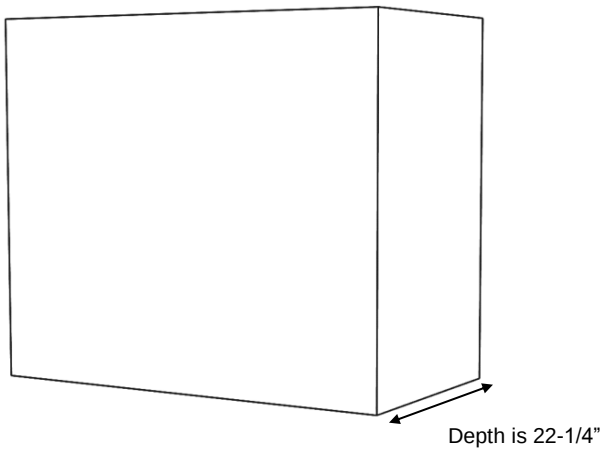

Standard BXV Series (BXV)

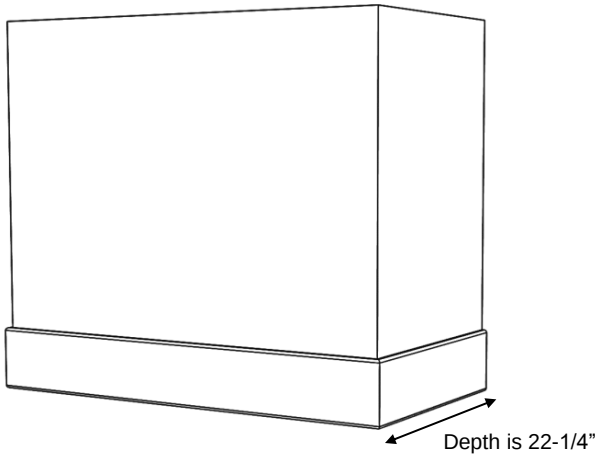

BX Series shown with Hardwood Base (BXVHW)

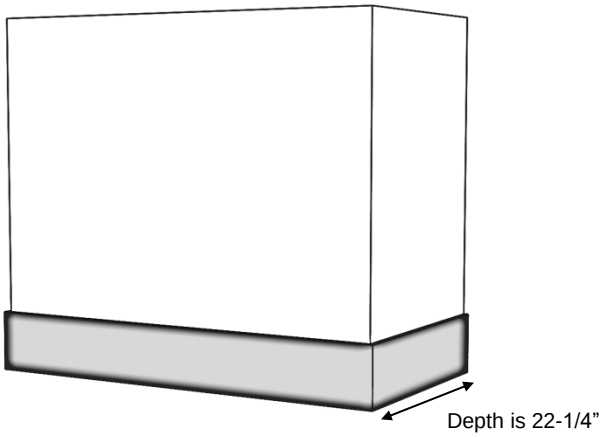

BXV Series shown with Stainless Steel Base (BXVSS)

BXV Series

Standard Widths	30, 36, 42, 48 (Reduced widths available) *Minimum Width 30”
Standard Heights	24, 30, 36, 42, 48, 54, 60 (Reduced heights available)
Removable Options	Removable Top (RT) is available on BXVHW only – see modifications section.
Available Options	Applied Molding wrap – BXV only (See options page) Applied Hardwood Wrap – BXV only (See options page)
Ventilation	Hood will be same width as available vent width. Example: To use a 36” vent model, the hood should be a minimum of 36” wide
Grain Direction	Vertical (Base is Horizontal)

700 South Glaspie Street • Oxford, MI 48371 • (248) 572-6880 • email: sales@wood-hood.com • www.wood-hood.com

Copyright Stanisci Design2026 rights reserved

Britney - BXV Series

Free Standing

Standard Heights: 24, 30, 36, 42, 48, 54, 60

BXV- Standard Hood

BXV 30
BXV 36
BXV 42
BXV 48

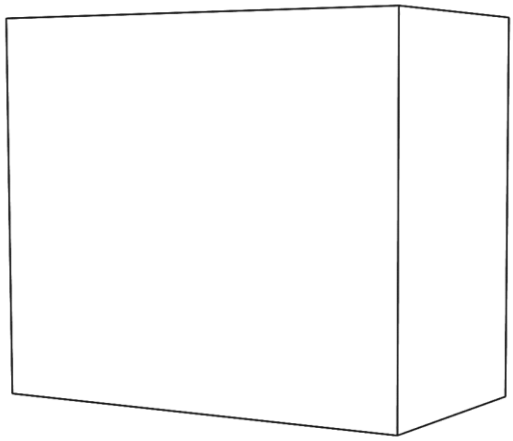

BXV- HW Base

BXVHW 30
BXVHW 36
BXVHW 42
BXVHW 48

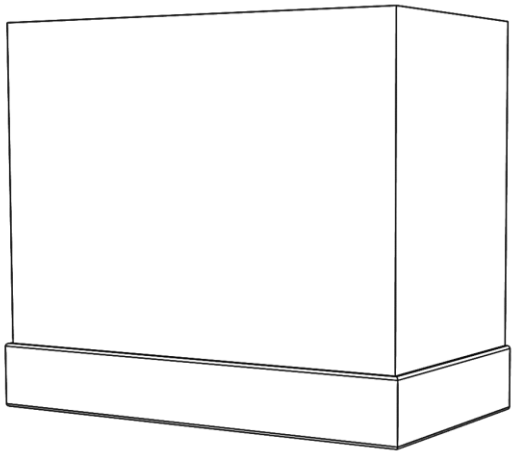

BXV- SS Base

BXVSS 30
BXVSS 36
BXVSS 42
BXVSS 48

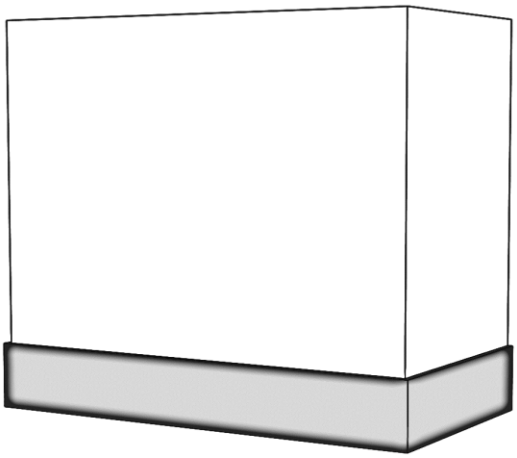

700 South Glaspie Street • Oxford, MI 48371 • (248) 572-6880 • email: sales@wood-hood.com • *www.wood-hood.com*

Copyright Stanisci Design 2026 rights reserved

STANISCI DESIGN

Cambridge - C Series

Free Standing

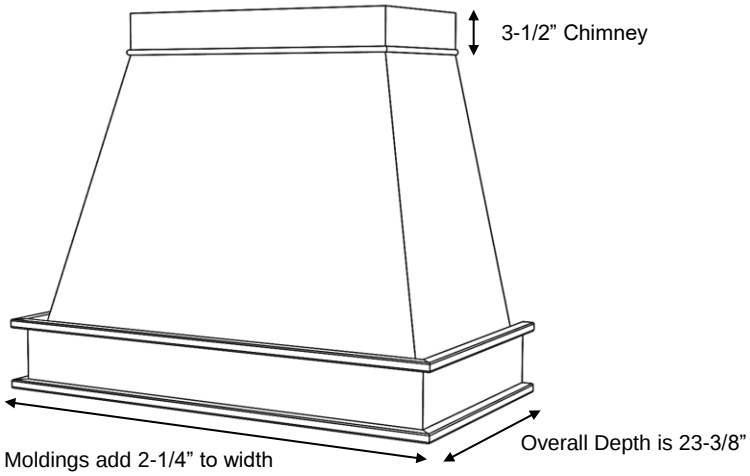

C Series shown with PL Base (CPL) and #3 Basic moldings

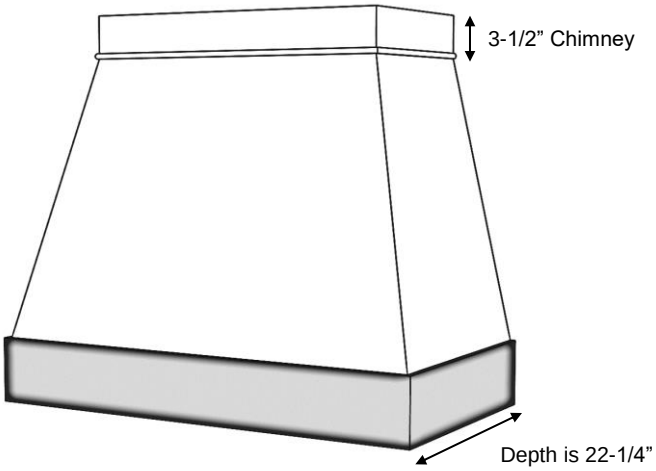

C Series shown with Stainless Steel Base (CSS)

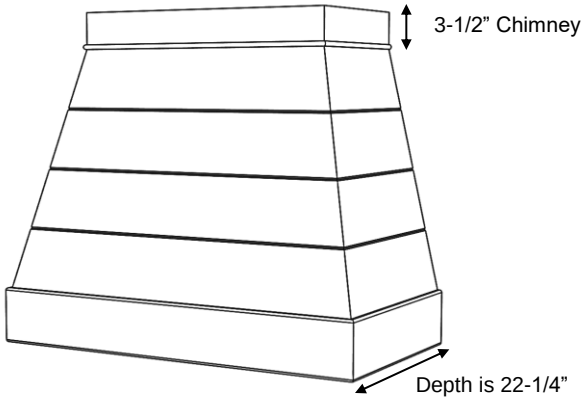

C Series shown with HW Base (CHWHB) and Horizontal Beading

Close up of V-groove “Horizontal bead” option

C Series

Standard Widths	30, 36, 42, 48, 54, 60 (Reduced widths available) *Minimum Width 30”
Standard Heights	24, 30, 36, 42, 48, 54 (Reduced heights available)
Removable Options	Removable Top (RT) – see modifications section. Applied Removable Panel (ARP) – see modifications section.
Ventilation	Hood will be same width as available vent width. Example: To use a 36” vent model, the hood should be a minimum of 36” wide
Available Moldings	#3 Basic is standard. #1 Classic or #2 Simple available upon request. Base molding only, chimney molding does not change.
Grain Direction	Horizontal Vertical grain available on a custom quote basis

700 South Glaspie Street • Oxford, MI 48371 • (248) 572-6880 • email: sales@wood-hood.com • www.wood-hood.com

Copyright Stanisci Design 2026 rights reserved

Cambridge - C Series

Free Standing

Standard Heights: 24, 30, 36, 42, 48, 54

C- Hardwood Base

CHW 30
CHW 36
CHW 42
CHW 48
CHW 54
CHW 60

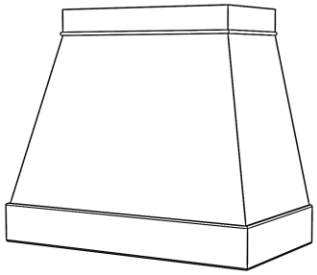

C- PL Base

CPL 30
CPL 36
CPL 42
CPL 48
CPL 54
CPL 60

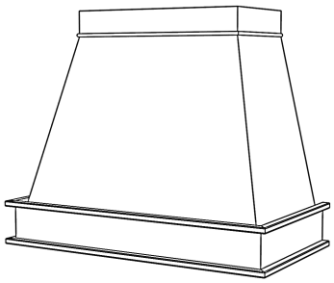

C- SL Base

CSL 30
CSL 36
CSL 42
CSL 48
CSL 54
CSL 60

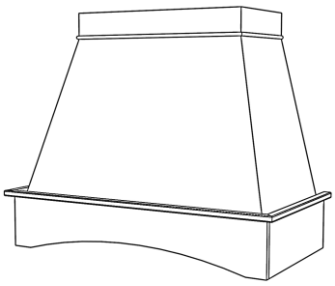

C- SS Base

CSS 30
CSS 36
CSS 42
CSS 48
CSS 54
CSS 60

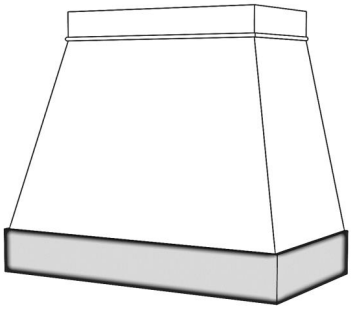

C-Hardwood Base, Horizontal Beading *

CHWHB 30
CHWHB 36
CHWHB 42
CHWHB 48
CHWHB 54
CHWHB 60

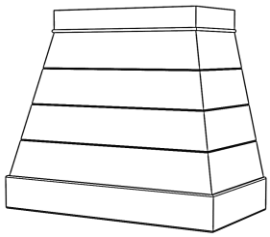

C- PL Base, Horizontal Beading *

CPLHB 30
CPLHB 36
CPLHB 42
CPLHB 48
CPLHB 54
CPLHB 60

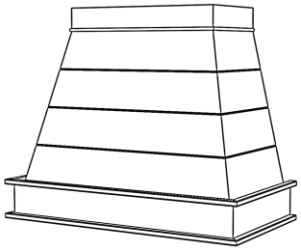

C- SL Base, Horizontal Beading *

CSLHB 30
CSLHB 36
CSLHB 42
CSLHB 48
CSLHB 54
CSLHB 60

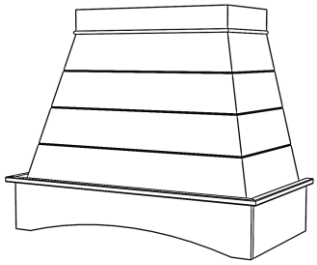

C- SS Base, Horizontal Beading *

CSSHB 30
CSSHB 36
CSSHB 42
CSSHB 48
CSSHB 54
CSSHB 60

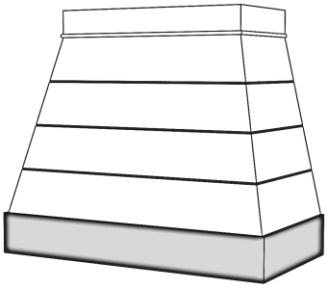

**** # of Beads***
24" tall: 2 beads (3 sections)
30-36" tall: 3 beads (4 sections)
42" tall: 4 beads (5 sections)
48"-54" tall: 5 beads (6 sections)

700 South Glaspie Street • Oxford, MI 48371 • (248) 572-6880 • email: sales@wood-hood.com • www.wood-hood.com

Copyright Stanisci Design 2026 rights reserved

Charlotte - CX Series

Free Standing

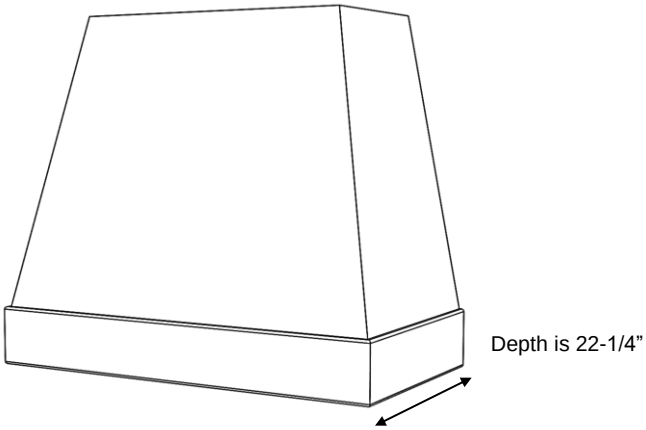

CX Series shown with Hardwood Base (CXHW)

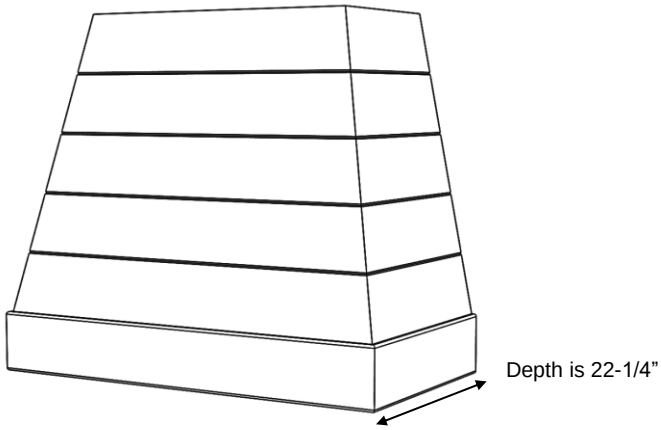

CX Series shown with Hardwood Base and Horizontal Beading (CXHWHB)

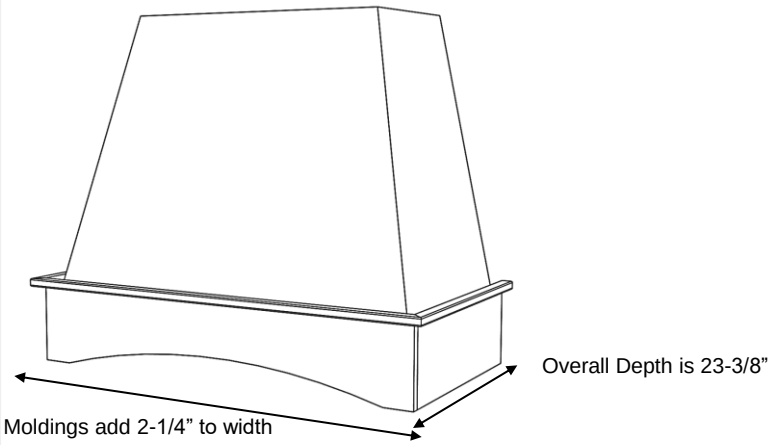

CX Series shown with SL Base (CXSL) and #3 Basic moldings

Close up of V-groove “Horizontal bead” option

CX Series

Standard Widths	30, 36, 42, 48, 54, 60 (Reduced widths available) *Minimum Width 30”
Standard Heights	24, 30, 36, 42, 48 (Reduced heights available)
Removable Options	Removable Top (RT) – see modifications section. Applied Removable Panel (ARP) – see modifications section.
Ventilation	Hood will be same width as available vent width. Example: To use a 36” vent model, the hood should be a minimum of 36” wide.
Available Moldings	#3 Basic is standard #1 Classic or #2 Simple available upon request
Grain Direction	Horizontal Vertical grain available on a custom quote basis

700 South Glaspie Street • Oxford, MI 48371 • (248) 572-6880 • email: sales@wood-hood.com • www.wood-hood.com

Copyright Stanisci Design 2026 rights reserved

STANISCI DESIGN

Charlotte - CX Series

Free Standing

Standard Heights: 24, 30, 36, 42, 48

CX- Hardwood Base

CXHW 30
CXHW 36
CXHW 42
CXHW 48
CXHW 54
CXHW 60

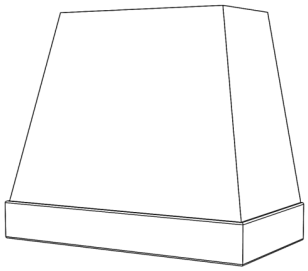

CX- PL Base

CXPL 30
CXPL 36
CXPL 42
CXPL 48
CXPL 54
CXPL 60

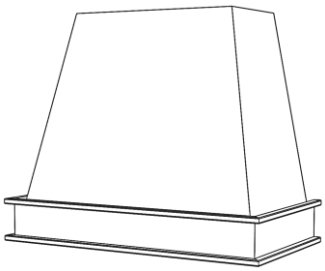

CX- SL Base

CXSL 30
CXSL 36
CXSL 42
CXSL 48
CXSL 54
CXSL 60

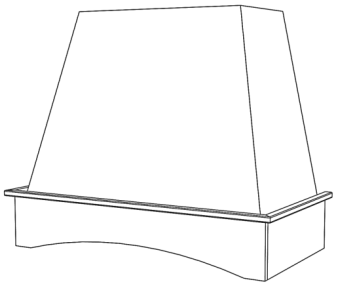

CX- SS Base

CXSS 30
CXSS 36
CXSS 42
CXSS 48
CXSS 54
CXSS 60

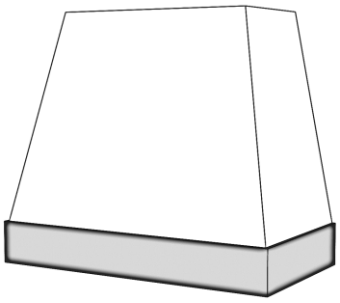

CX- Hardwood Base, Horizontal Beading *

CXHWHB 30
CXHWHB 36
CXHWHB 42
CXHWHB 48
CXHWHB 54
CXHWHB 60

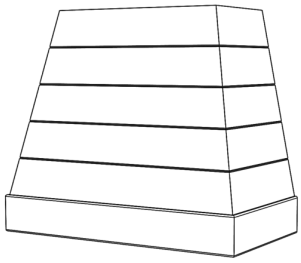

CX- PL Base, Horizontal Beading *

CXPLHB 30
CXPLHB 36
CXPLHB 42
CXPLHB 48
CXPLHB 54
CXPLHB 60

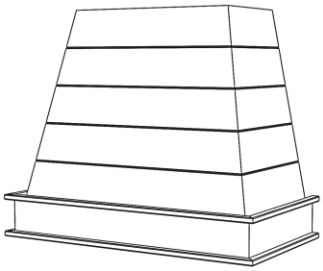

CX- SL Base, Horizontal Beading *

CXSLHB 30
CXSLHB 36
CXSLHB 42
CXSLHB 48
CXSLHB 54
CXSLHB 60

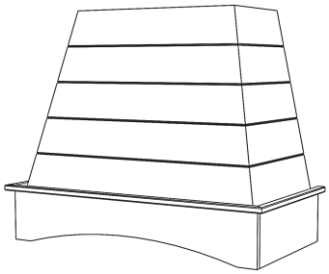

CX- SS Base, Horizontal Beading *

CXSSHB 30
CXSSHB 36
CXSSHB 42
CXSSHB 48
CXSSHB 54
CXSSHB 60

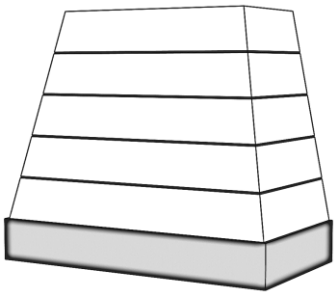

**** # of Beads***

24-30" tall: 3 beads (4 sections)
36-42" tall: 4 beads (5 sections)
48" tall: 5 beads (6 sections)

700 South Glaspie Street • Oxford, MI 48371 • (248) 572-6880 • email: sales@wood-hood.com • www.wood-hood.com

Copyright Stanisci Design 2026 rights reserved

Dalton - D Series

Free Standing

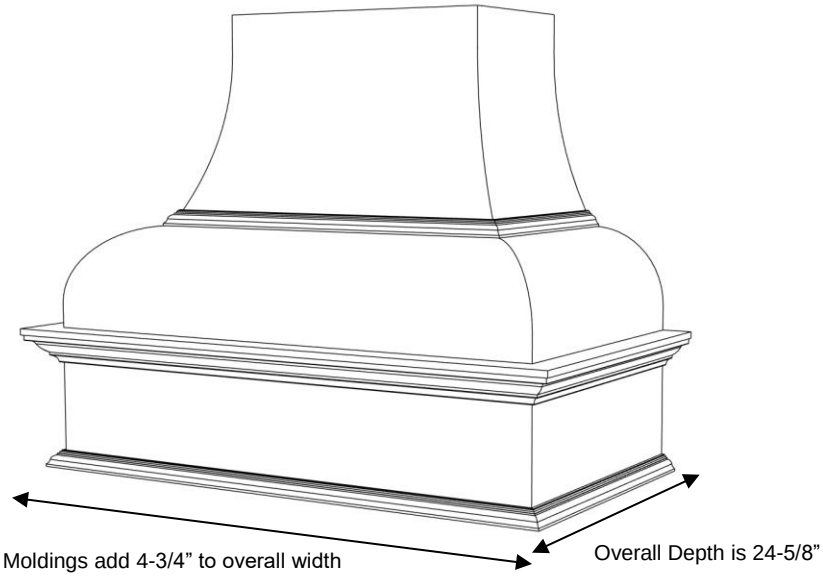

D Series shown with Standard Base (D) and #1 Classic moldings

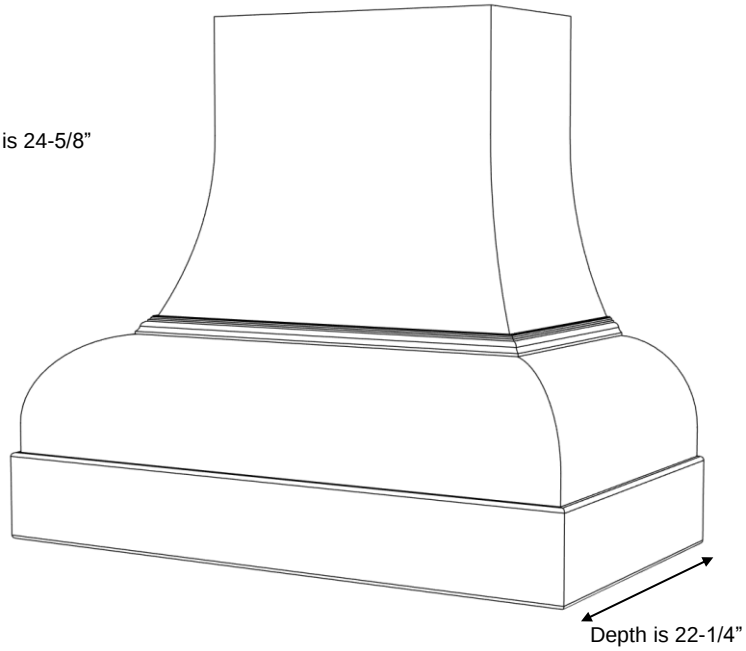

D Series shown with Hardwood Base (DHW)

D Series

Standard Widths	36, 42, 48, 54, 60 (Reduced widths available) *Minimum Width 36”
Standard Heights	30, 36, 42, 48 (Reduced heights available)
Removable Options	Not available
Ventilation	Hood will be same width as available vent width. Example: To use a 36” vent model, the hood should be a minimum of 36” wide
Available Moldings	#1 Classic, #2 Simple
Grain Direction	Vertical (Base is horizontal)

700 South Glaspie Street • Oxford, MI 48371 • (248) 572-6880 • email: sales@wood-hood.com • www.wood-hood.com

Copyright Stanisci Design 2026 rights reserved

STANISCI DESIGN

Dalton - D Series

Free Standing

Standard Heights: 30, 36, 42, 48

D- Standard Base

D 36
D 42
D 48
D 54
D 60

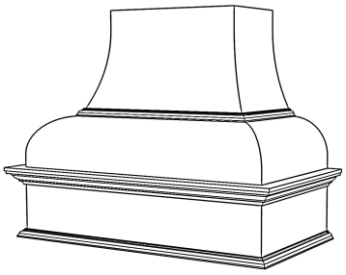

D- Hardwood Base

DHW 36
DHW 42
DHW 48
DHW 54
DHW 60

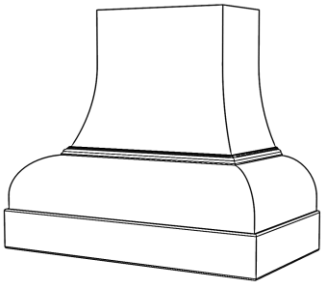

D- RS Base

DRS 36
DRS 42
DRS 48
DRS 54
DRS 60

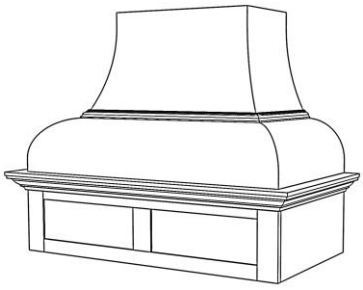

D- RSS Base

DRSS 36
DRSS 42
DRSS 48
DRSS 54
DRSS 60

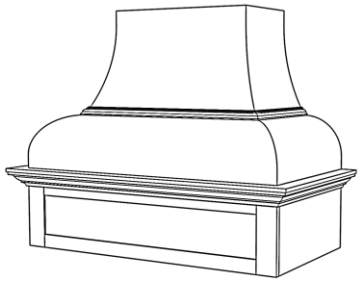

D- RA Base

DRA 36
DRA 42
DRA 48
DRA 54
DRA 60

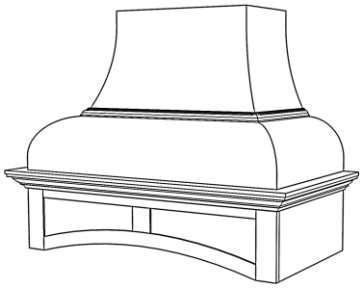

D- DP2 Base

DDP2 36
DDP2 42
DDP2 48
DDP2 54
DDP2 60

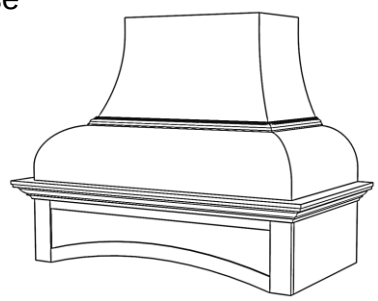

D- SL Base

DSL 36
DSL 42
DSL 48
DSL 54
DSL 60

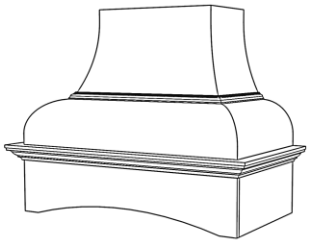

D- DP1Base

DDP1 36
DDP1 42
DDP1 48
DDP1 54
DDP1 60

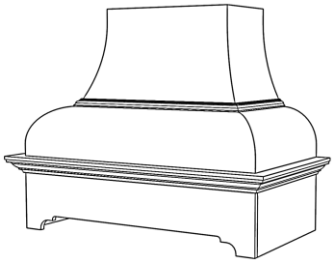

D- SS Base

DSS 36
DSS 42
DSS 48
DSS 54
DSS 60

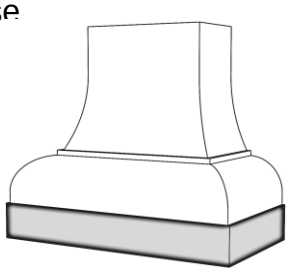

700 South Glaspie Street • Oxford, MI 48371 • (248) 572-6880 • email: sales@wood-hood.com • *www.wood-hood.com*

Copyright Stanisci Design 2026 rights reserved

STANISCI DESIGN

Elevation - E Series

Free Standing

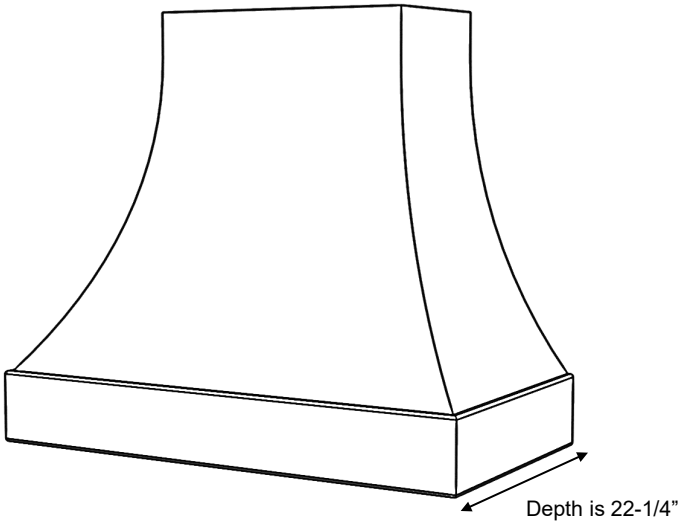

E Series shown with Hardwood Base (EHW)

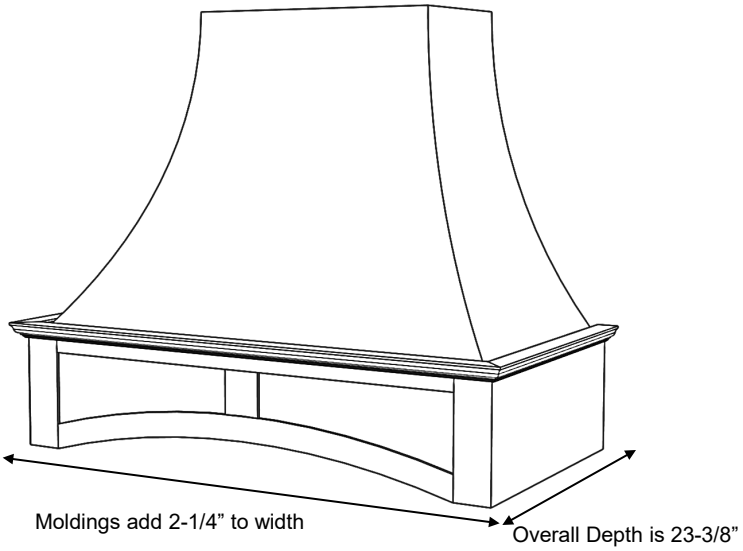

E Series shown with RA Base (ERA)
and #1 Classic molding

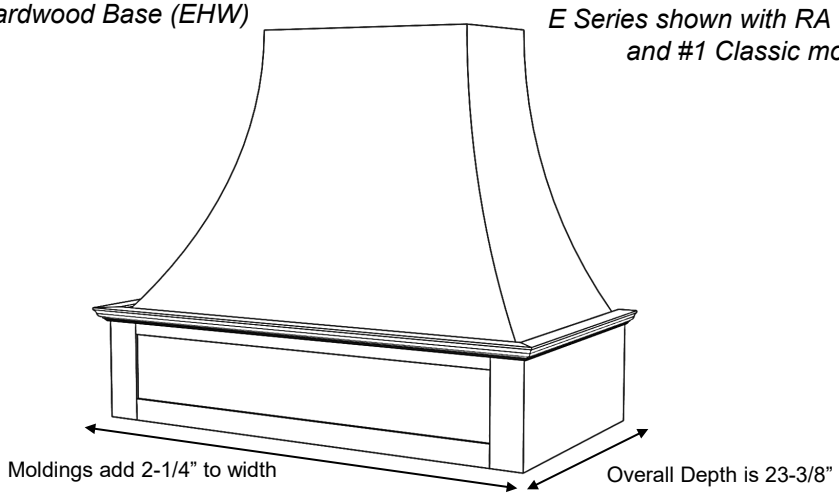

E Series shown with RSS Base (ERSS)
and #1 Classic molding

E Series

Standard Widths	36, 42, 48, 54, 60 (Reduced widths available)
Standard Heights	30, 36, 42, 48 (Reduced heights available)
Removable Options	Removable Top (RT) – see modifications section.
Available Options	Hardwood Battens (See batten options page)
Ventilation	Hood will be same width as available vent width. Example: To use a 36” vent model, the hood should be a minimum of 36” wide
Available Moldings	#1 Classic, #2 Simple, #3 Basic
Grain Direction	Vertical (Base is horizontal)

700 South Glaspie Street • Oxford, MI 48371 • (248) 572-6880 • email: sales@wood-hood.com • www.wood-hood.com

Copyright Stanisci Design 2026 rights reserved

STANISCI DESIGN

Elevation - E Series

Free Standing

Standard Heights: 30, 36, 42, 48

E- Standard Base

E 36
E 42
E 48
E 54
E 60

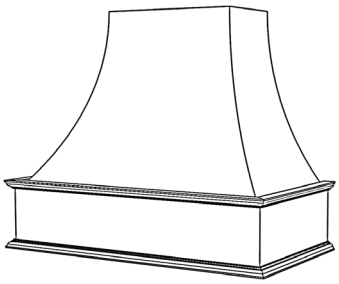

E- Hardwood Base

EHW 36
EHW 42
EHW 48
EHW 54
EHW 60

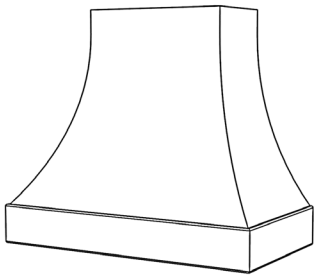

E- RS Base

ERS 36
ERS 42
ERS 48
ERS 54
ERS 60

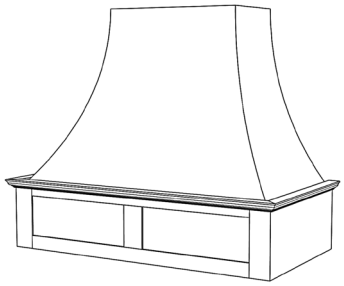

E- RSS Base

ERSS 36
ERSS 42
ERSS 48
ERSS 54
ERSS 60

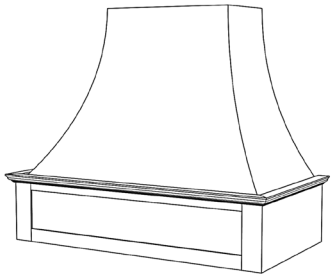

E- RA Base

ERA 36
ERA 42
ERA 48
ERA 54
ERA 60

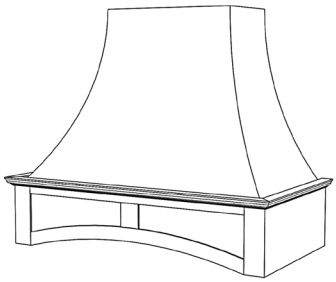

E- DP2 Base

EDP2 36
EDP2 42
EDP2 48
EDP2 54
EDP2 60

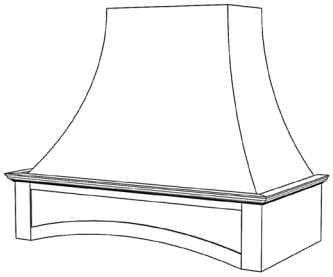

E- SL Base

ESL 36
ESL 42
ESL 48
ESL 54
ESL 60

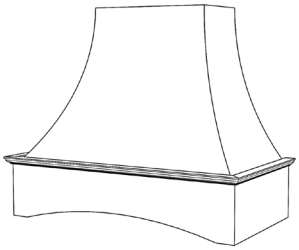

E- DP1 Base

EDP1 36
EDP1 42
EDP1 48
EDP1 54
EDP1 60

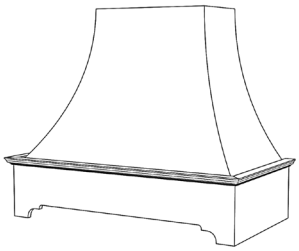

E- SS Base

ESS 36
ESS 42
ESS 48
ESS 54
ESS 60

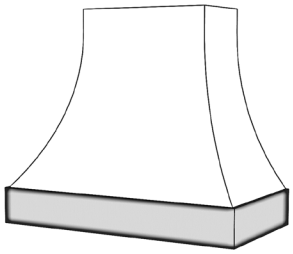

700 South Glaspie Street • Oxford, MI 48371 • (248) 572-6880 • email: sales@wood-hood.com • www.wood-hood.com

Copyright Stanisci Design 2026 rights reserved

Previously Named: E2

STANISCI DESIGN

Elegance - E200 Series

Free Standing

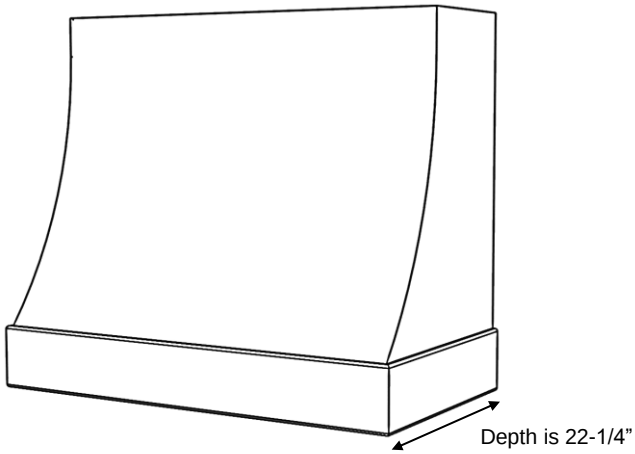

E200 Series shown with Hardwood Base (E200HW)

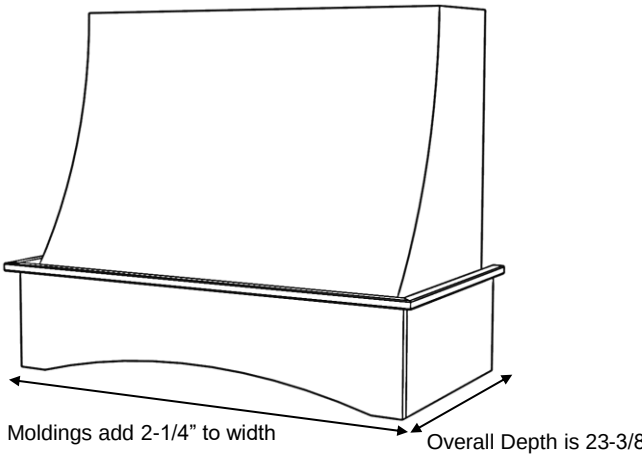

E200 Series shown with SL Base (E200SL)
and #3 Basic moldings

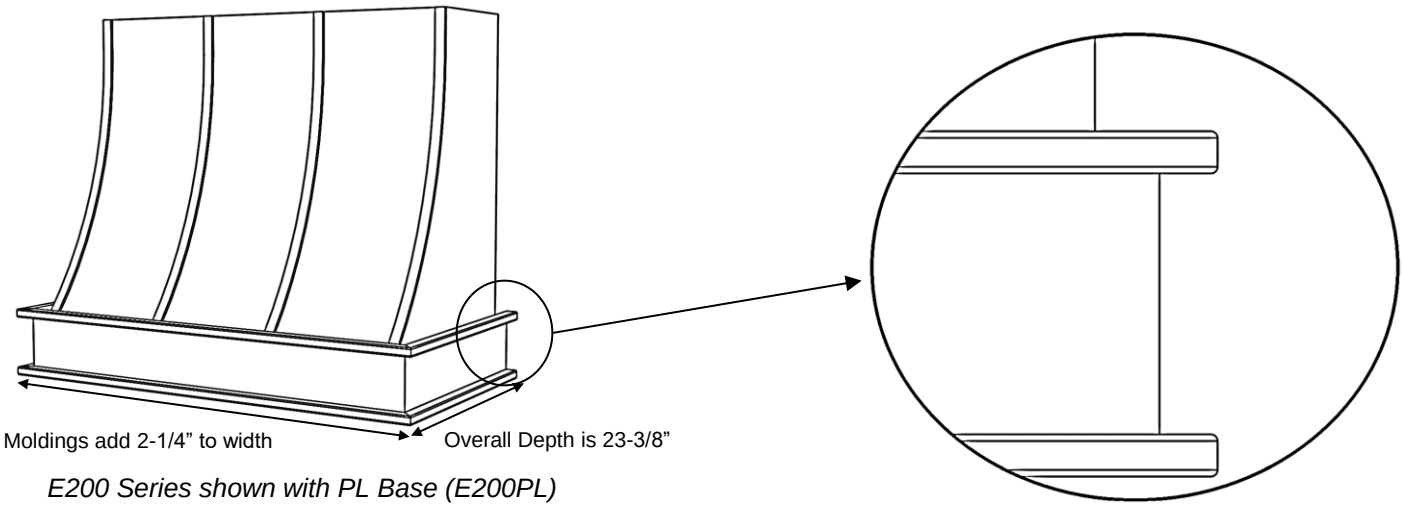

E200 Series shown with PL Base (E200PL)
#3 Basic moldings and optional Hardwood Battens

E200 Series

Standard Widths	30, 36, 42, 48, 54, 60 (Reduced widths available) *Minimum Width 30”
Standard Heights	24, 30, 36, 42, 48 (Reduced heights available)
Removable Options	Removable Top (RT) – see modifications section.
Available options	Hardwood Battens (See batten options page)
Ventilation	Hood will be same width as available vent width. Example: To use a 36” vent model, the hood should be a minimum of 36” wide
Available Moldings	#3 Basic is standard #1 Classic or #2 Simple available upon request
Grain Direction	Vertical (Base is horizontal)

700 South Glaspie Street • Oxford, MI 48371 • (248) 572-6880 • email: sales@wood-hood.com • www.wood-hood.com

Copyright Stanisci Design 2026 rights reserved

Previously Named: E2

STANISCI DESIGN

Elegance – E200 Series

Free Standing

Standard Heights: 24, 30, 36, 42, 48

E200- PL Base

E200PL 30
E200PL 36
E200PL 42
E200PL 48
E200PL 54
E200PL 60

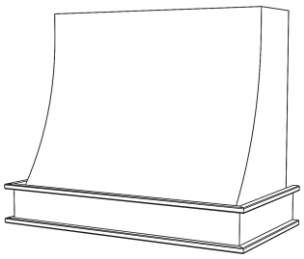

E200- Hardwood Base

E200HW 30
E200HW 36
E200HW 42
E200HW 48
E200HW 54
E200HW 60

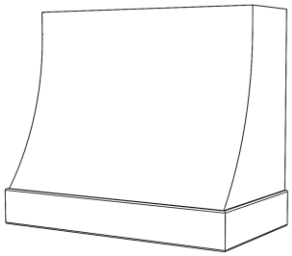

E200- RS Base

E200RS 30
E200RS 36
E200RS 42
E200RS 48
E200RS 54
E200RS 60

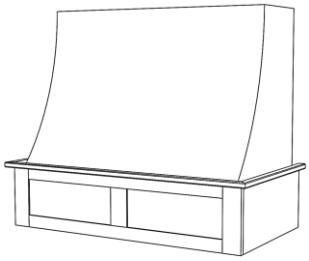

E200- RSS Base

E200RSS 30
E200RSS 36
E200RSS 42
E200RSS 48
E200RSS 54
E200RSS 60

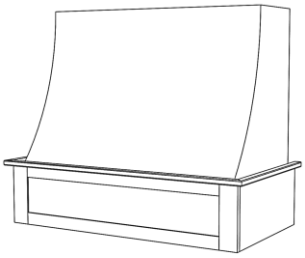

E200- RA Base

E200RA 30
E200RA 36
E200RA 42
E200RA 48
E200RA 54
E200RA 60

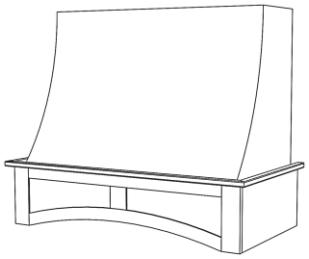

E200- DP2 Base

E200DP2 30
E200DP2 36
E200DP2 42
E200DP2 48
E200DP2 54
E200DP2 60

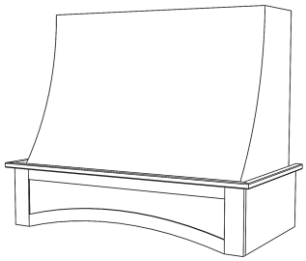

E200- SL Base

E200SL 30
E200SL 36
E200SL 42
E200SL 48
E200SL 54
E200SL 60

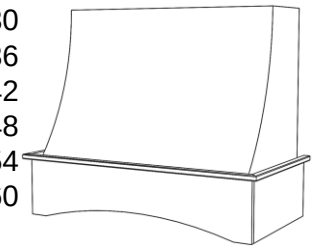

E200- DP1 Base

E200DP1 30
E200DP1 36
E200DP1 42
E200DP1 48
E200DP1 54
E200DP1 60

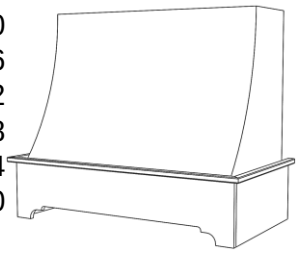

E200- SS Base

E200SS 30
E200SS 36
E200SS 42
E200SS 48
E200SS 54
E200SS 60

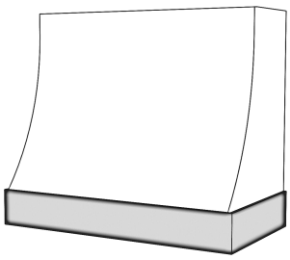

700 South Glaspie Street • Oxford, MI 48371 • (248) 572-6880 • email: sales@wood-hood.com • www.wood-hood.com

Copyright Stanisci Design 2026 rights reserved

Previously Named: E3

STANISCI DESIGN

Eastland – E300 Series

In-Series

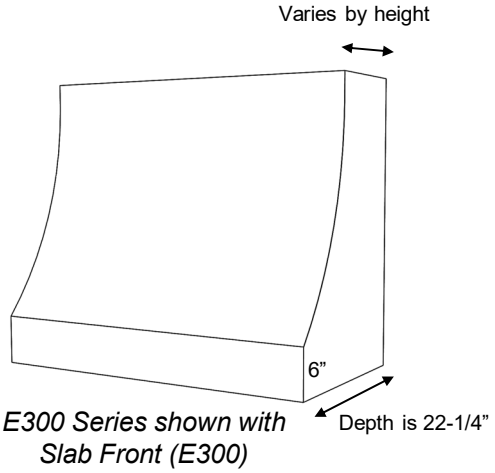

E300 Series shown with Slab Front (E300)

Top Depth by Height for Models: E300, E300RS, E300RSS

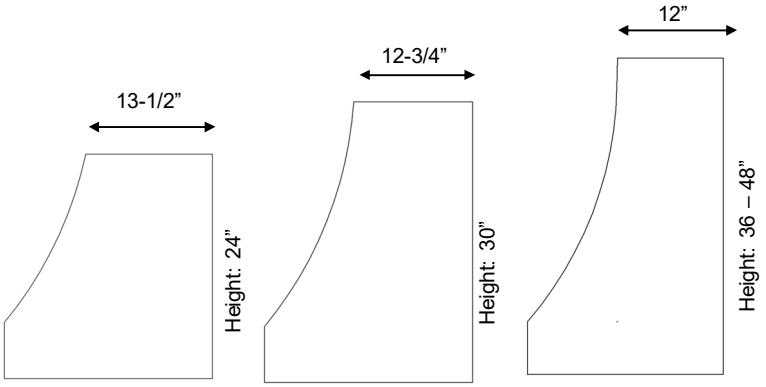

Top Depth by Height for Models: E300RA, E300DP2, E300SL, E300DP1

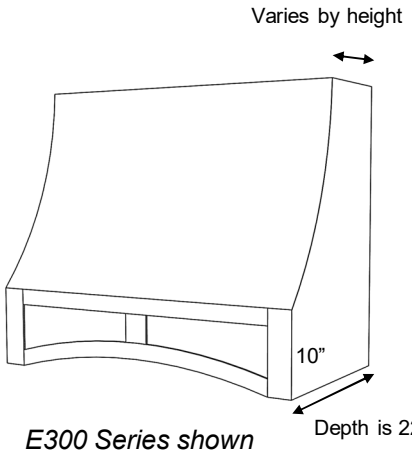

E300 Series shown With RA Base (E300RA)

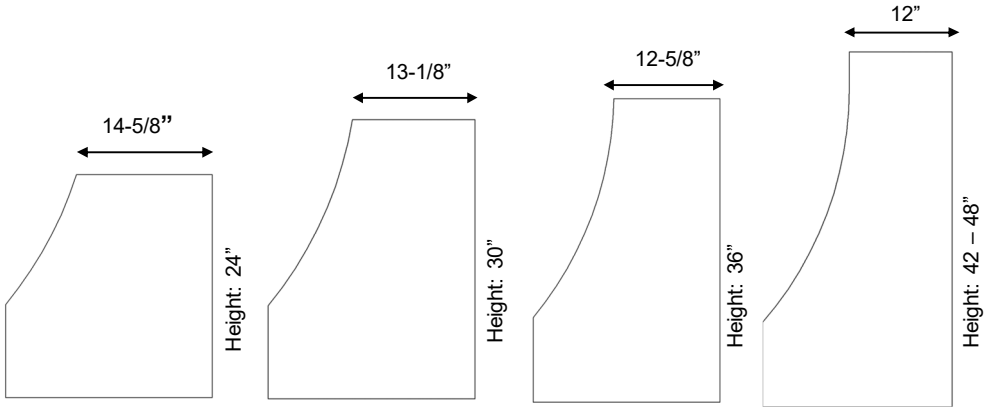

E300 Series

Standard Widths	30, 36, 42, 48, 54, 60 (Reduced widths available) *Minimum Width 30”
Standard Heights	24, 30, 36, 42, 48 (Reduced heights available)
Removable Options	Not available
Available Options	Hardwood Battens (See batten options page) Applied Molding wrap (See options page) Applied Hardwood Wrap (See options page)
Ventilation	Hood will be same width as available vent width. Example: To use a 36” vent model, the hood should be a minimum of 36” wide.
Grain Direction	Vertical (Front base panel is horizontal, except Standard E300 model will be vertical)

700 South Glaspie Street • Oxford, MI 48371 • (248) 572-6880 • email: sales@wood-hood.com • www.wood-hood.com

Copyright Stanisci Design 2026 all rights reserved

Standard Heights: 24, 30, 36, 42, 48

E300

E300 30
E300 36
E300 42
E300 48
E300 54
E300 60

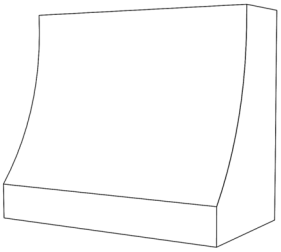

E300- RS Base

E300RS 30
E300RS 36
E300RS 42
E300RS 48
E300RS 54
E300RS 60

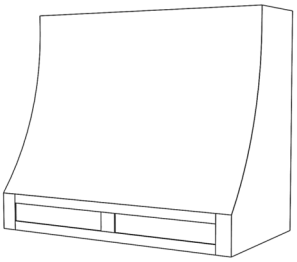

E300- RSS Base

E300RSS 30
E300RSS 36
E300RSS 42
E300RSS 48
E300RSS 54
E300RSS 60

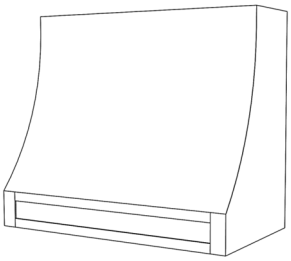

E300- RA Base

E300RA 30
E300RA 36
E300RA 42
E300RA 48
E300RA 54
E300RA 60

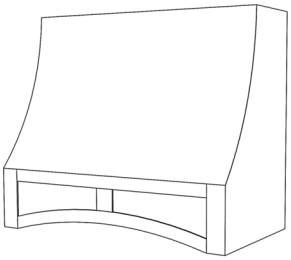

E300- DP2 Base

E300DP2 30
E300DP2 36
E300DP2 42
E300DP2 48
E300DP2 54
E300DP2 60

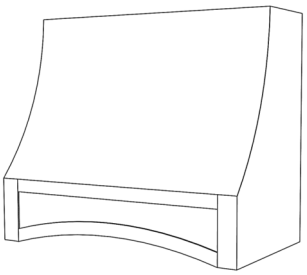

E300- SL Base

E300SL 30
E300SL 36
E300SL 42
E300SL 48
E300SL 54
E300SL 60

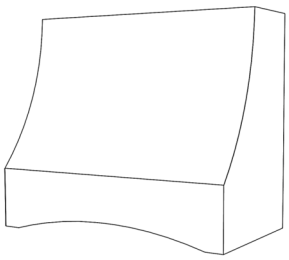

E300- DP1 Base

E300DP1 30
E300DP1 36
E300DP1 42
E300DP1 48
E300DP1 54
E300DP1 60

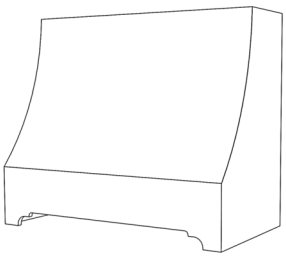

Copyright Stanisci Design 2026 all rights reserved

STANISCI DESIGN

ER Range Hoods

Available in 5 designs

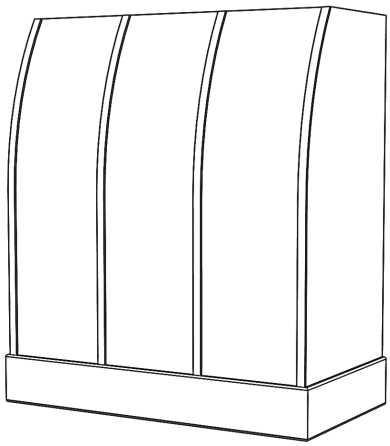

ER200 Series shown with Hardwood Base (ER200HW) and optional battens

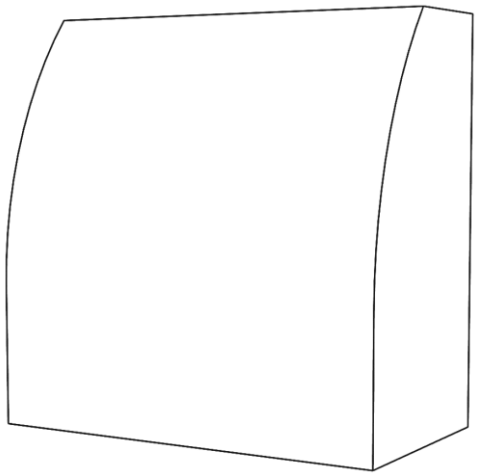

ER300 Series hood (ER300)

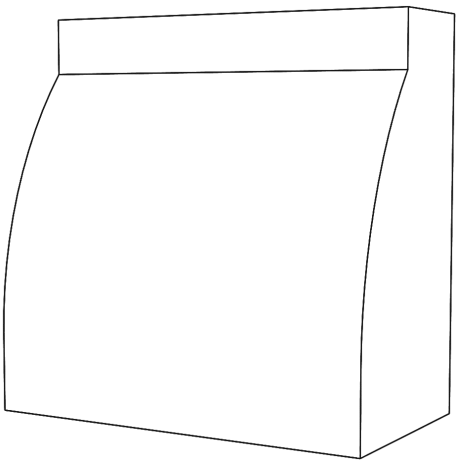

ER400 Series hood (ER400)

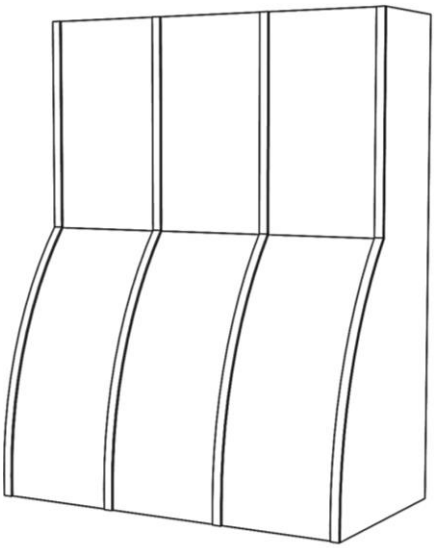

ER500 Series hood (ER500) shown with optional battens

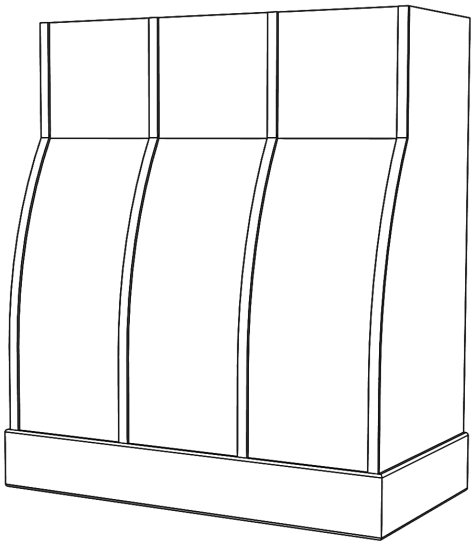

ER600 Series hood shown with hardwood base (ER600HW) and optional battens on curved face

700 South Glaspie Street • Oxford, MI 48371 • (248) 572-6880 • email: sales@wood-hood.com • www.wood-hood.com

Copyright Stanisci Design 2026 rights reserved

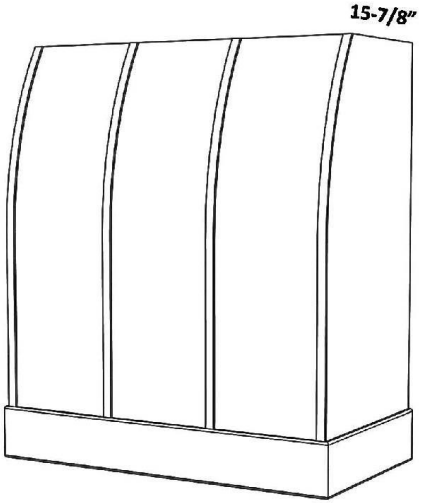

ER200 shown with hardwood base (ER200HW) and optional battens

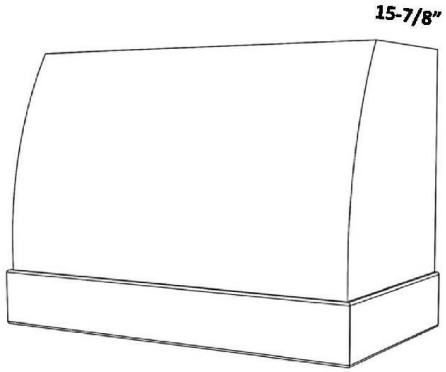

ER200 shown with hardwood base (ER200HW)

ER200
Free-Standing

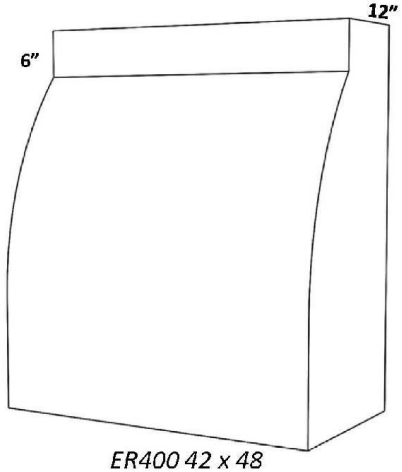

ER400 42 x 48

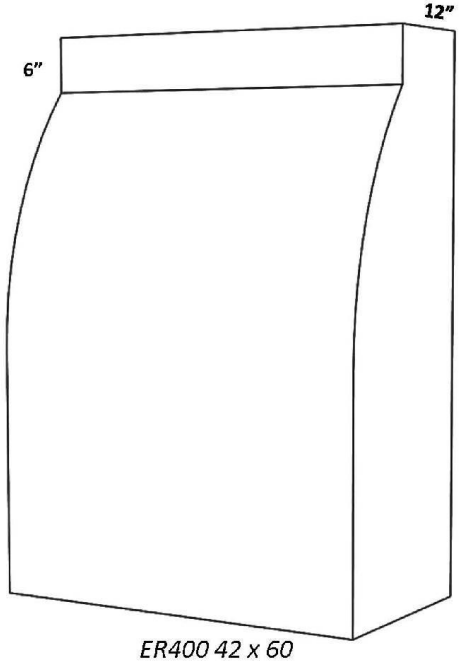

ER400 42 x 60

ER400
In-Series

ER300
In-Series

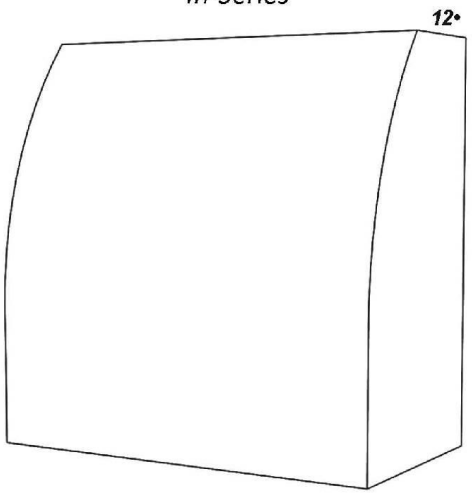

ER300 Series hood (ER300)

ER500
In-Series

FOR OVERALL HEIGHT: 42 - 60"

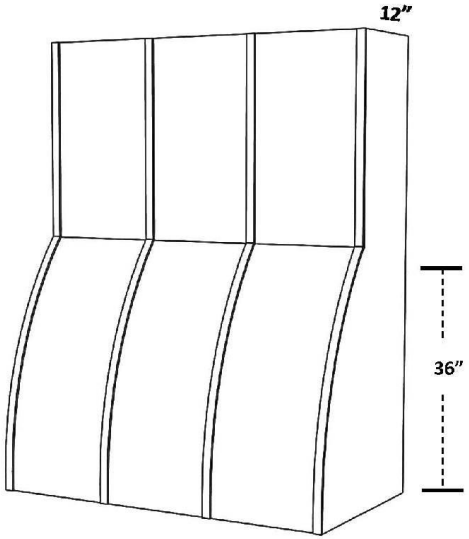

ER500 Series hood (ER500)
Shown with optional battens

FOR OVERALL HEIGHT: 36"

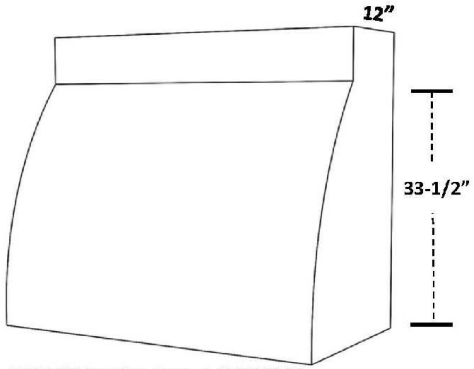

ER500 Series hood (ER500)

ER600
Free-Standing

FOR OVERALL HEIGHT: 42 - 60"

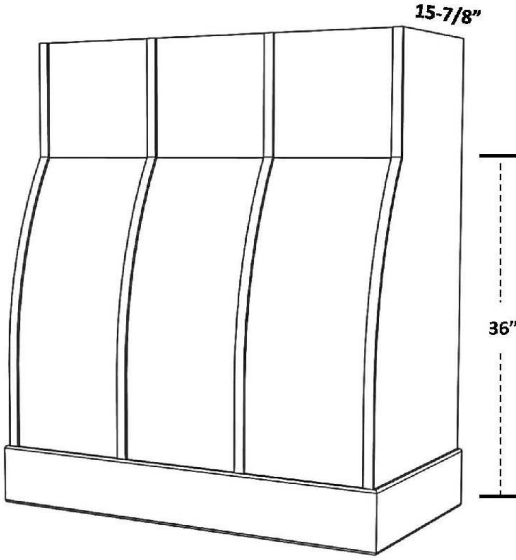

ER600 shown with hardwood base (ER600HW) and optional battens

FOR OVERALL HEIGHT: 36"

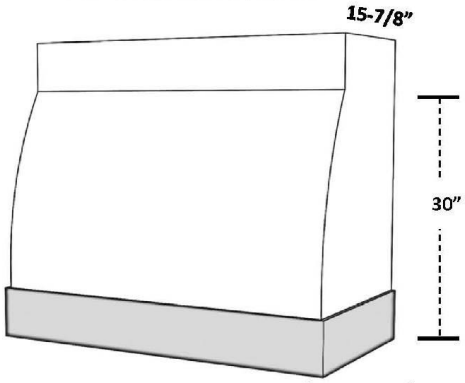

ER600 shown with SS Base (ER600SS)

Erwin - ER200 Series

Free Standing

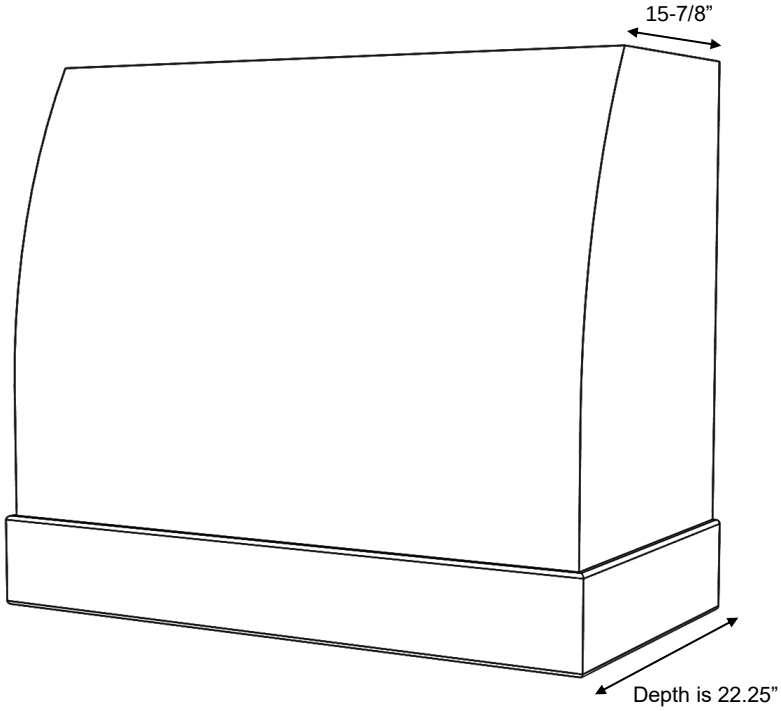

ER200 Series shown with Hardwood Base (ER200HW)

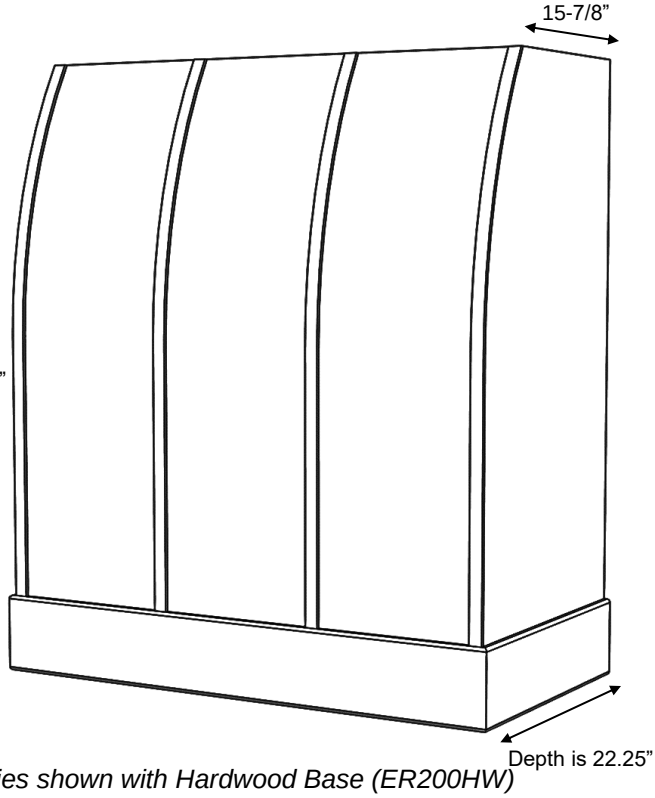

ER200 Series shown with Hardwood Base (ER200HW)
and optional Hardwood Battens

ER200 Series

Standard Widths	30, 36, 42, 48, 54, 60 (Reduced widths available) *Minimum Width 30”
Standard Heights	30, 36, 42, 48, 54, 60 (Reduced heights available) *Minimum Height 30”
Removable Options	Not available
Available Options	Hardwood Battens (See batten options page)
Ventilation	Hood will be same width as available vent width. Example: To use a 36” vent model, the hood should be a minimum of 36” wide.
Grain Direction	Vertical (base is horizontal)

700 South Glaspie Street • Oxford, MI 48371 • (248) 572-6880 • email: sales@wood-hood.com • www.wood-hood.com

Copyright Stanisci Design 2026 rights reserved

Erwin - ER200 Series

Free Standing

Standard Heights: 30, 36, 42, 48, 54, 60

ER200- Hardwood Base

ER200HW 30
ER200HW 36
ER200HW 42
ER200HW 48
ER200HW 54*
ER200HW 60*

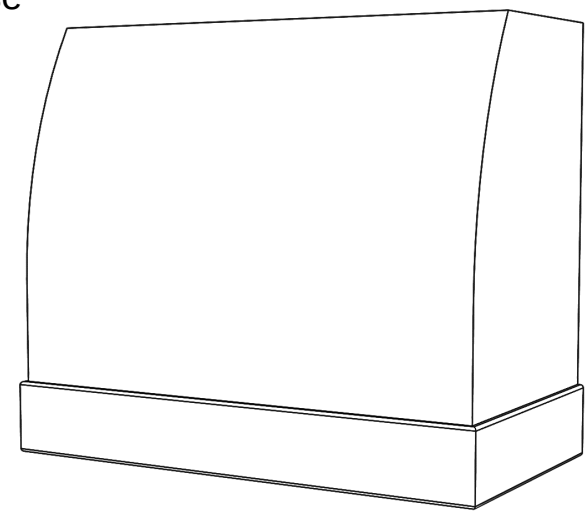

ER200- SS Base

ER200SS 30
ER200SS 36
ER200SS 42
ER200SS 48
ER200SS 54*
ER200SS 60*

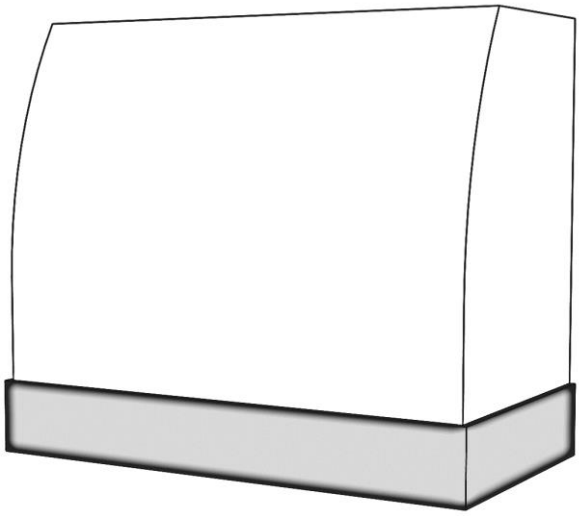

** Hoods over 48" Wide have a maximum height of 48".*

700 South Glaspie Street • Oxford, MI 48371 • (248) 572-6880 • email: sales@wood-hood.com • www.wood-hood.com

Copyright Stanisci Design 2026 rights reserved

Erie - ER300 Series

In-Series

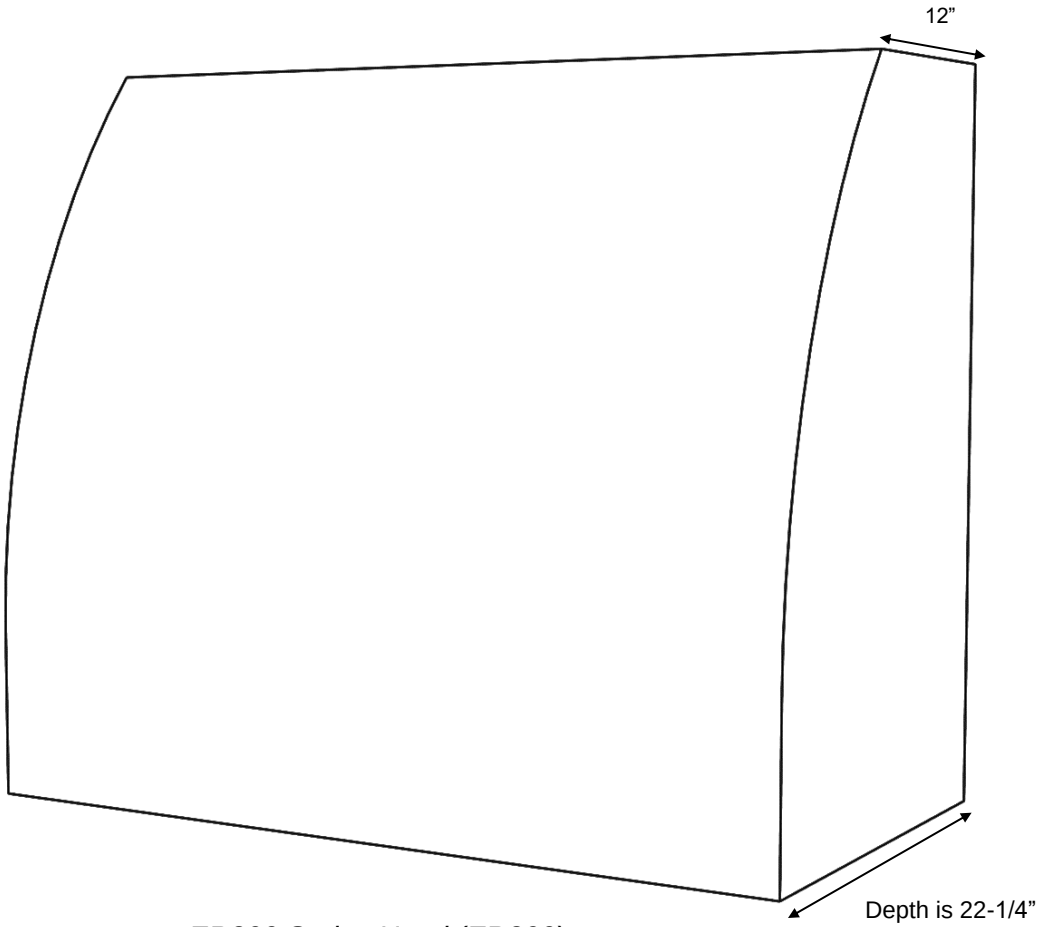

ER300 Series Hood (ER300)

ER300 Series

Standard Widths	30, 36, 42, 48, 54, 60 (Reduced widths available) *Minimum Width 30”
Standard Heights	36, 42, 48, 54, 60 (Reduced heights available) *Minimum Height 36”
Removable Options	Not available
Available Options	Hardwood Battens (See batten options page)
Ventilation	Hood will be same width as available vent width. Example: To use a 36” vent model, the hood should be a minimum of 36” wide.
Grain Direction	Vertical

700 South Glaspie Street • Oxford, MI 48371 • (248) 572-6880 • email: sales@wood-hood.com • www.wood-hood.com

Copyright Stanisci Design 2026 rights reserved

Erie - ER300 Series

In-Series

Standard Heights: 36, 42, 48, 54, 60

ER300

ER300 30
ER300 36
ER300 42
ER300 48
ER300 54*
ER300 60*

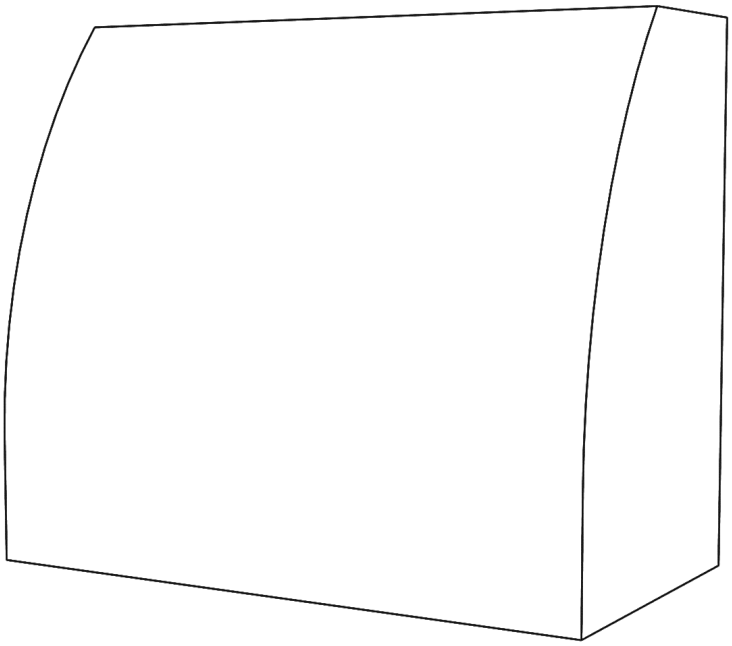

** Hoods over 48" Wide have a maximum height of 42"*

700 South Glaspie Street • Oxford, MI 48371 • (248) 572-6880 • email: sales@wood-hood.com • www.wood-hood.com

Copyright Stanisci Design 2026 rights reserved

Ericson - ER400 Series

In-Series

FOR OVERALL HEIGHTS: 48” – 60”

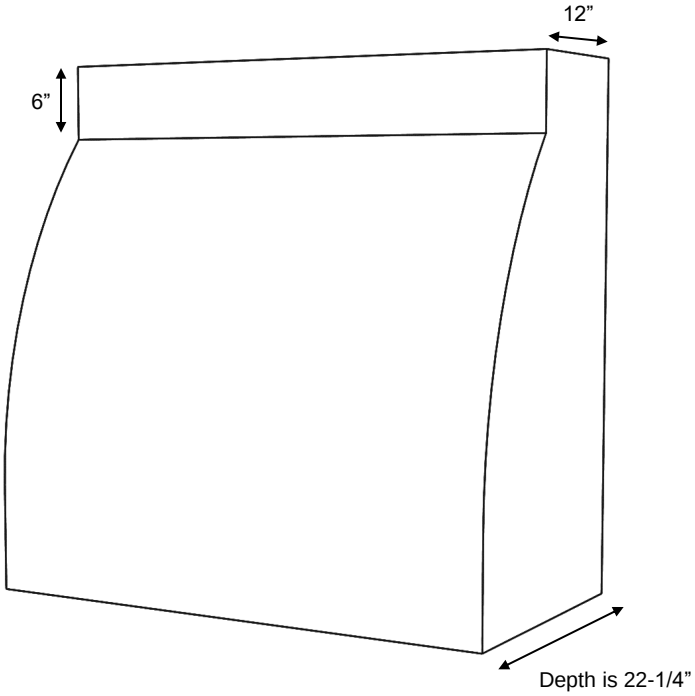

ER400 Series Hood, 42 x 48 (ER400)

ER400 Series

Standard Widths	30, 36, 42, 48, 54, 60 (Reduced widths available) *Minimum Width 30”
Standard Heights	48, 54, 60 (Reduced heights available) *Minimum Height 48”
Removable Options	Not available
Available Options	Hardwood Battens (See batten options page)
Ventilation	Hood will be same width as available vent width. Example: To use a 36” vent model, the hood should be a minimum of 36” wide.
Grain Direction	Vertical

700 South Glaspie Street • Oxford, MI 48371 • (248) 572-6880 • email: sales@wood-hood.com • *www.wood-hood.com*

Copyright Stanisci Design 2026 rights reserved

Ericson - ER400 Series

In- Series

Standard Heights: 48, 54, 60

ER400
ER400 30
ER400 36
ER400 42
ER400 48
ER400 54*
ER400 60*

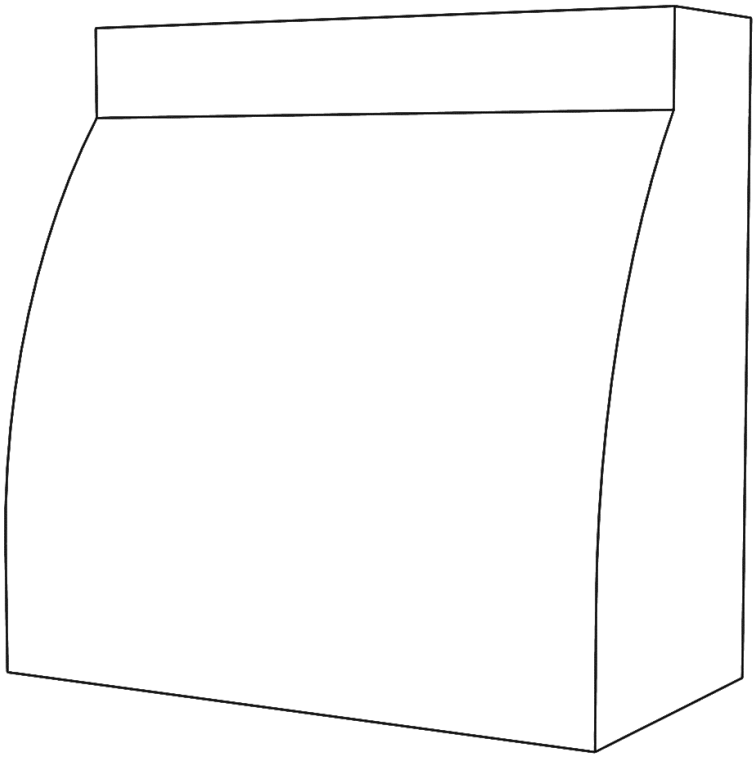

** Hoods over 48" Wide have a maximum height of 48"*

700 South Glaspie Street • Oxford, MI 48371 • (248) 572-6880 • email: sales@wood-hood.com • www.wood-hood.com

Copyright Stanisci Design 2026 rights reserved

Erdahl - ER500 Series

In-Series

FOR OVERALL HEIGHTS: 42” – 60”

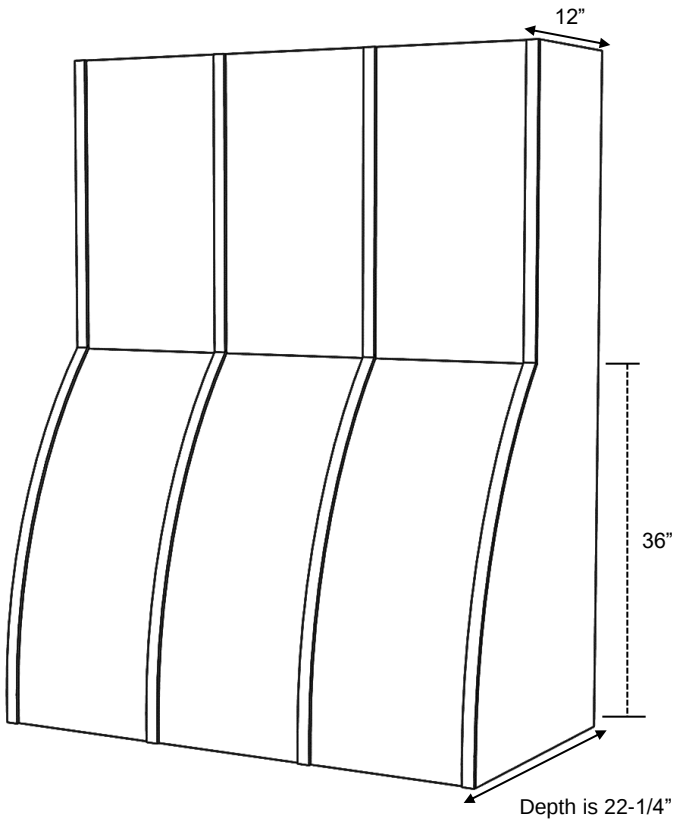

ER500 Series 42 x 54 (ER500)
Shown with optional Hardwood Battens

FOR OVERALL HEIGHT: 36”

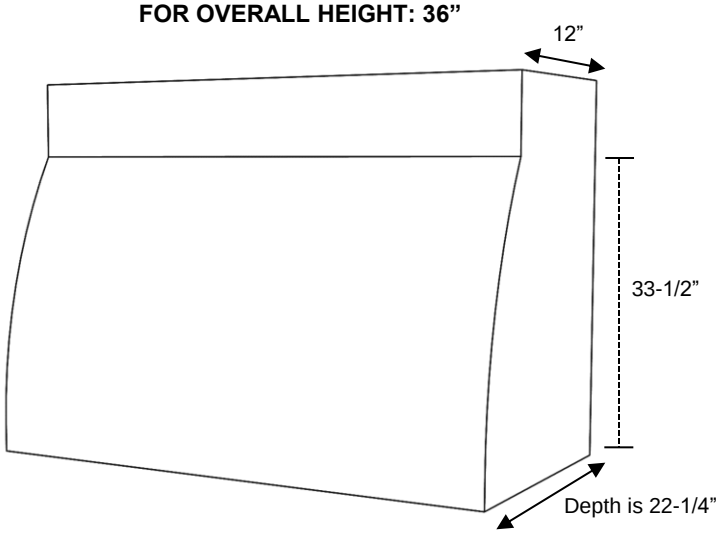

ER500 Series 42 x 36 (ER500)

ER500 Series

Standard Widths	30, 36, 42, 48, 54, 60 (Reduced widths available) *Minimum Width 30”
Standard Heights	36, 42, 48, 54, 60 (Reduced heights available) *Minimum Height 36”
Removable Options	Not available
Available Options	Hardwood Battens (See batten options page)
Ventilation	Hood will be same width as available vent width. Example: To use a 36” vent model, the hood should be a minimum of 36” wide.
Grain Direction	Vertical

700 South Glaspie Street • Oxford, MI 48371 • (248) 572-6880 • email: sales@wood-hood.com • www.wood-hood.com

Copyright Stanisci Design 2026 rights reserved

Erdahl - ER500 Series

In-Series

Standard Heights: 36, 42, 48, 54, 60

ER500

ER500 30
ER500 36
ER500 42
ER500 48
ER500 54
ER500 60

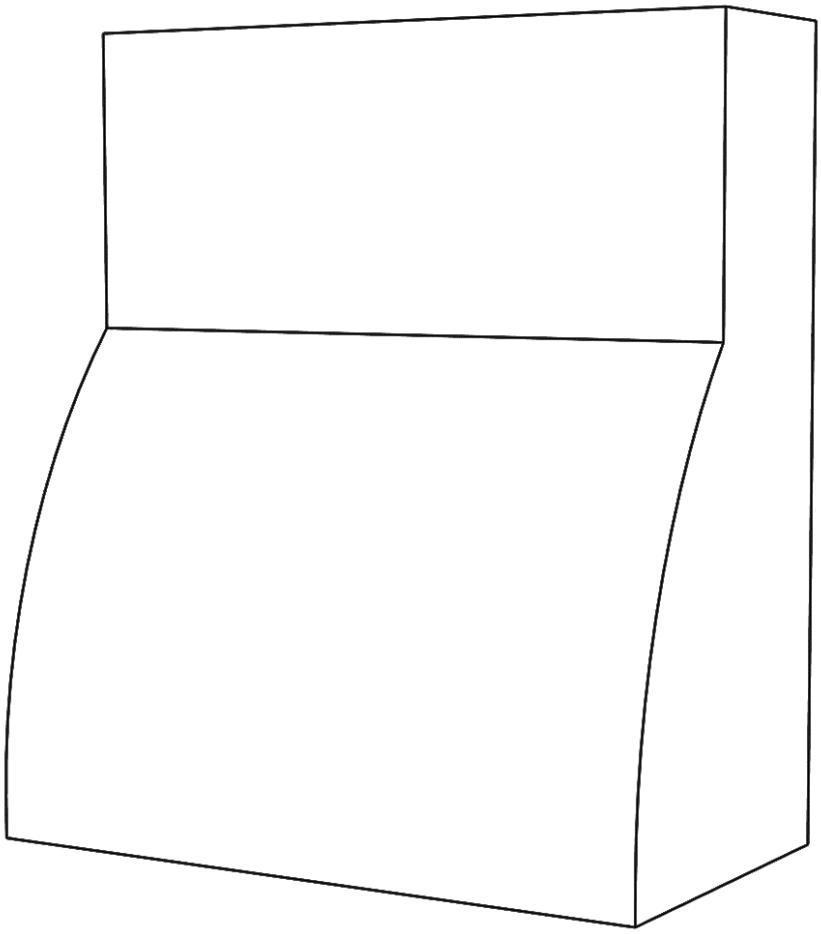

700 South Glaspie Street • Oxford, MI 48371 • (248) 572-6880 • email: sales@wood-hood.com • *www.wood-hood.com*

Copyright Stanisci Design 2026 rights reserved

Ernston - ER600 Series

Free Standing

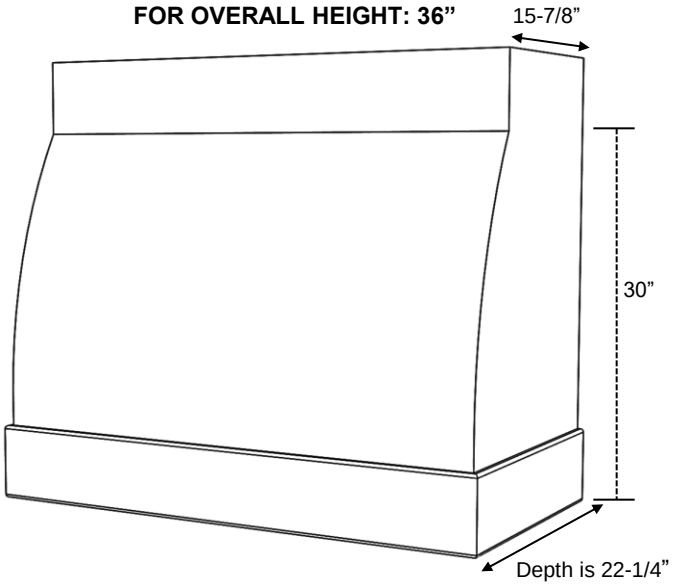

ER600 Series 42 x 36 shown with Hardwood Base (ER600HW)

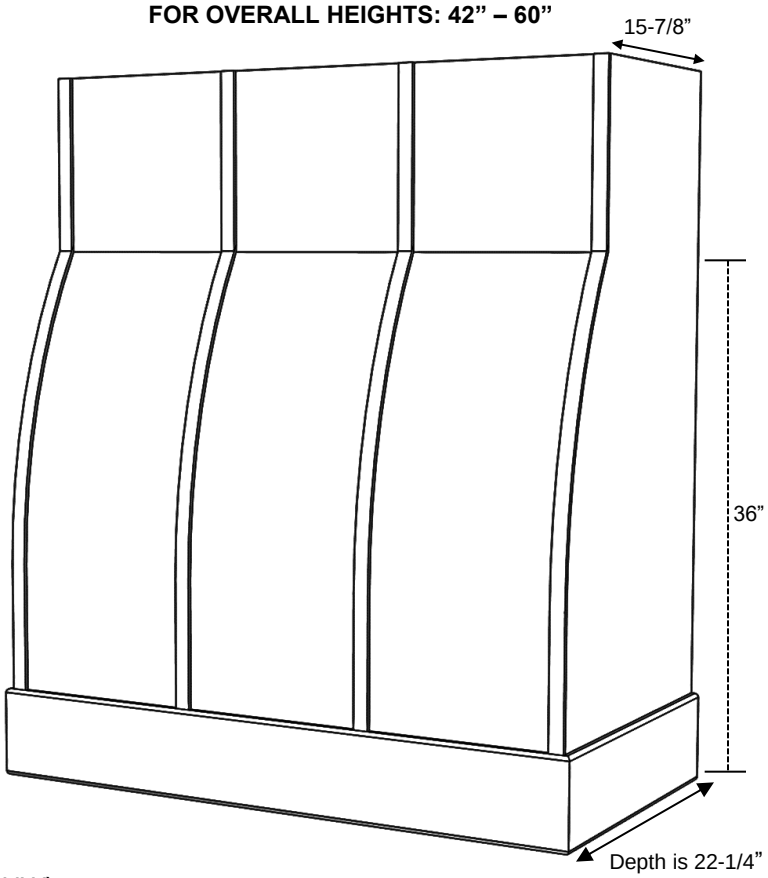

ER600 Series 42 x 48 shown with Hardwood Base (ER600HW) and optional Hardwood Battens

ER600 Series

Standard Widths	30, 36, 42, 48, 54, 60 (Reduced widths available) *Minimum Width 30”
Standard Heights	36, 42, 48, 54, 60 (Reduced heights available) *Minimum Height 36”
Removable Options	Not available
Available Options	Hardwood Battens (See batten options page)
Ventilation	Hood will be same width as available vent width. Example: To use a 36” vent model, the hood should be a minimum of 36” wide.
Grain Direction	Vertical (base is horizontal)

700 South Glaspie Street • Oxford, MI 48371 • (248) 572-6880 • email: sales@wood-hood.com • www.wood-hood.com

Copyright Stanisci Design 2026 rights reserved

Ernston - ER600 Series

Free Standing

Standard Heights: 36, 42, 48, 54, 60

ER600- Hardwood Base

ER600HW 30
ER600HW 36
ER600HW 42
ER600HW 48
ER600HW 54
ER600HW 60

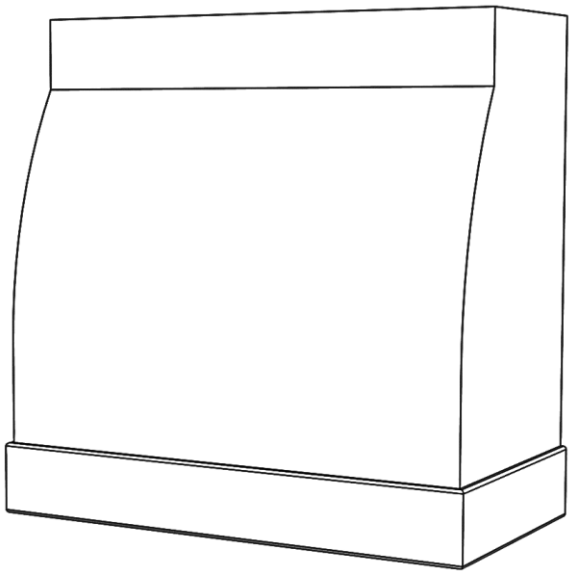

ER600- SS Base

ER600SS 30
ER600SS 36
ER600SS 42
ER600SS 48
ER600SS 54
ER600SS 60

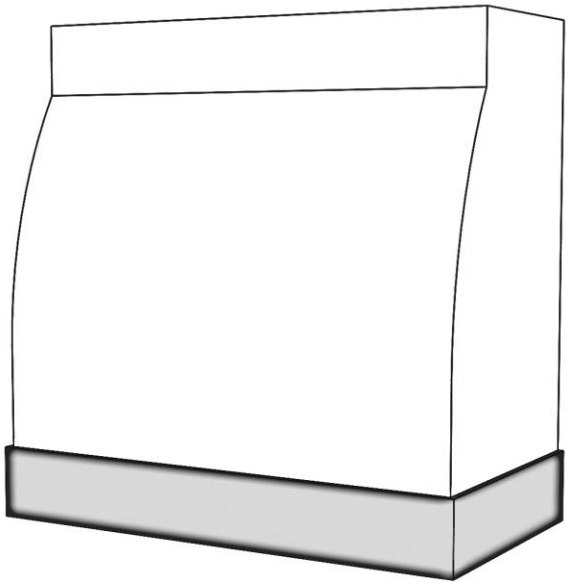

700 South Glaspie Street • Oxford, MI 48371 • (248) 572-6880 • email: sales@wood-hood.com • www.wood-hood.com

Copyright Stanisci Design 2026 rights reserved

Previously Named: FX2

STANISCI DESIGN

Fanfare - FX200 Series

Free Standing

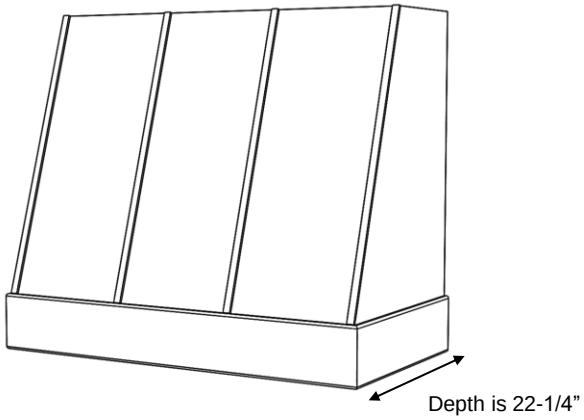

FX200 Series shown with Hardwood Base (FX200HW) and optional Hardwood Battens

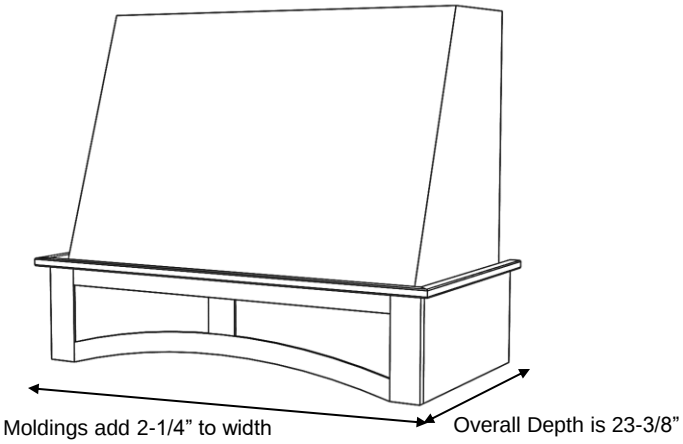

FX200 Series shown with RA Base (FX200RA) and #3 Basic Moldings

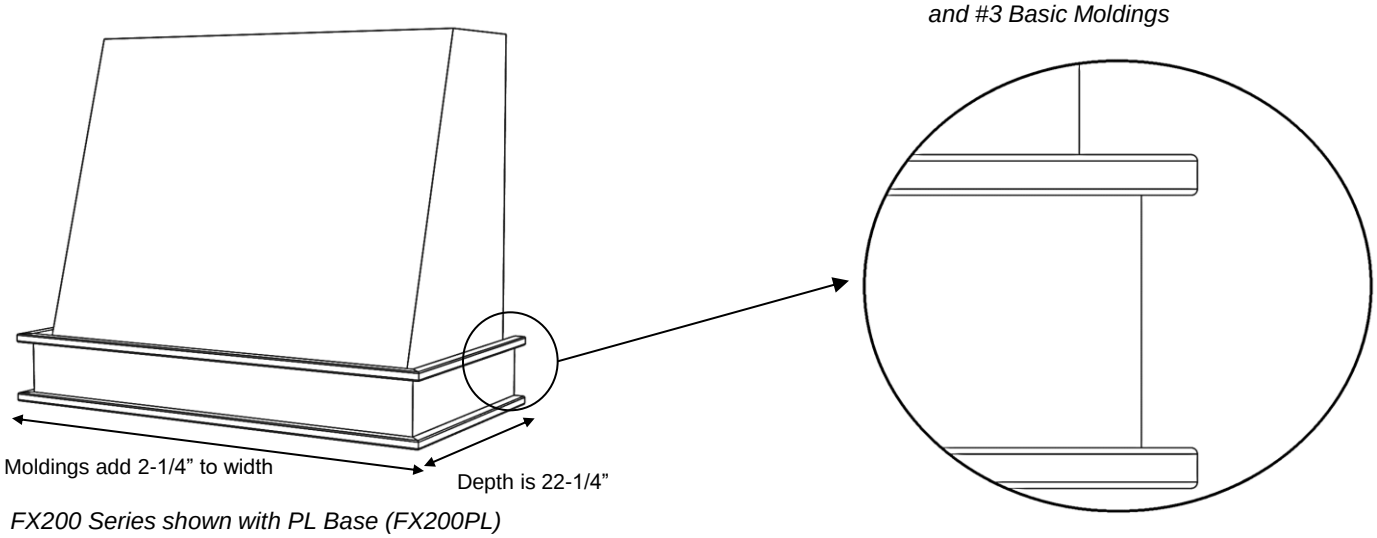

FX200 Series shown with PL Base (FX200PL) and #3 Basic moldings

FX200 Series

Standard Widths	30, 36, 42, 48, 54, 60 (Reduced widths available) *Minimum Width 30”
Standard Heights	24, 30, 36, 42, 48 (Reduced heights available)
Removable Options	Removable Top (RT) – see modifications section.
Ventilation	Hood will be same width as available vent width. Example: To use a 36” vent model, the hood should be a minimum of 36” wide
Available Moldings	#3 Basic is standard #1 Classic or #2 Simple available upon request
Available Options	Hardwood Battens (See batten options page)
Grain Direction	Vertical (Base is horizontal)

700 South Glaspie Street • Oxford, MI 48371 • (248) 572-6880 • email: sales@wood-hood.com • www.wood-hood.com

Copyright Stanisci Design 2026 rights reserved

Previously Named: FX2

STANISCI DESIGN

Fanfare - FX200 Series

Free Standing

Standard Heights: 24, 30, 36, 42, 48

FX200- PL Base

FX200PL 30
FX200PL 36
FX200PL 42
FX200PL 48
FX200PL 54
FX200PL 60

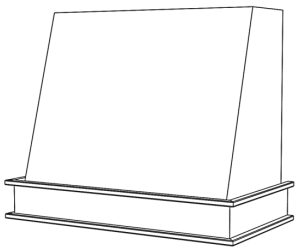

FX200- Hardwood Base

FX200HW 30
FX200HW 36
FX200HW 42
FX200HW 48
FX200HW 54
FX200HW 60

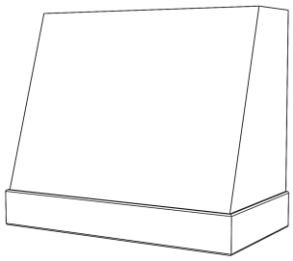

FX200- RS Base

FX200RS 30
FX200RS 36
FX200RS 42
FX200RS 48
FX200RS 54
FX200RS 60

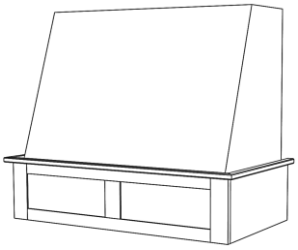

FX200- RSS Base

FX200RSS 30
FX200RSS 36
FX200RSS 42
FX200RSS 48
FX200RSS 54
FX200RSS 60

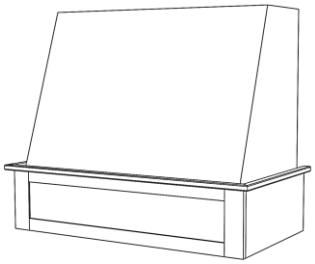

FX200- RA Base

FX200RA 30
FX200RA 36
FX200RA 42
FX200RA 48
FX200RA 54
FX200RA 60

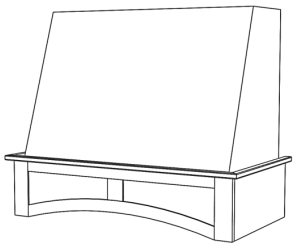

FX2- DP2 Base

FX200DP2 30
FX200DP2 36
FX200DP2 42
FX200DP2 48
FX200DP2 54
FX200DP2 60

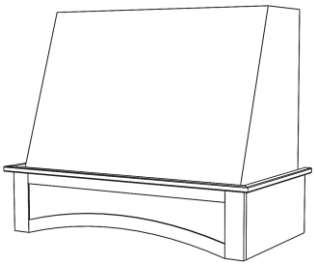

FX200- SL Base

FX200SL 30
FX200SL 36
FX200SL 42
FX200SL 48
FX200SL 54
FX200SL 60

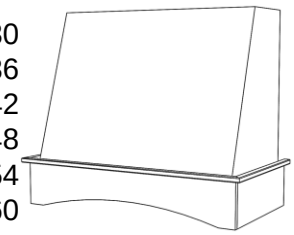

FX200- DP1 Base

FX200DP1 30
FX200DP1 36
FX200DP1 42
FX200DP1 48
FX200DP1 54
FX200DP1 60

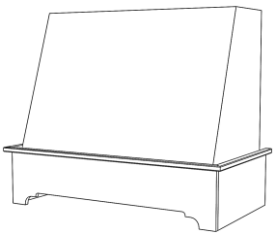

FX200- SS Base

FX200SS 30
FX200SS 36
FX200SS 42
FX200SS 48
FX200SS 54
FX200SS 60

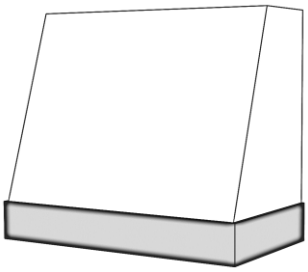

700 South Glaspie Street • Oxford, MI 48371 • (248) 572-6880 • email: sales@wood-hood.com • www.wood-hood.com

Copyright Stanisci Design 2026 rights reserved

Previously Named: FX

STANISCI DESIGN

Foxcote - FX300 Series

In-Series

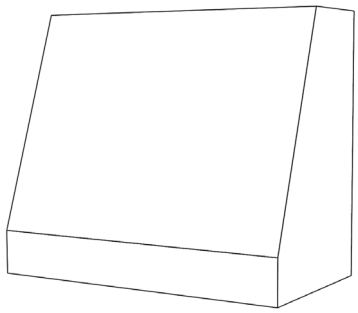

FX300 Series shown with Slab Front (FX300)

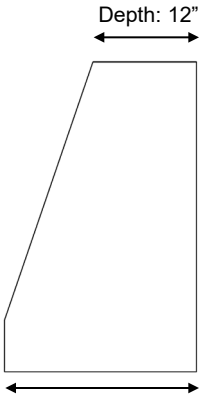

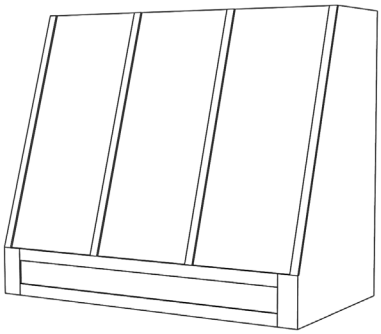

FX300 Series shown with 1 Base Door Panel (FX300BP) and Optional Hardwood Battens

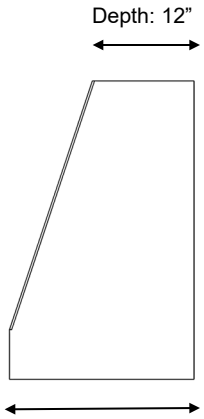

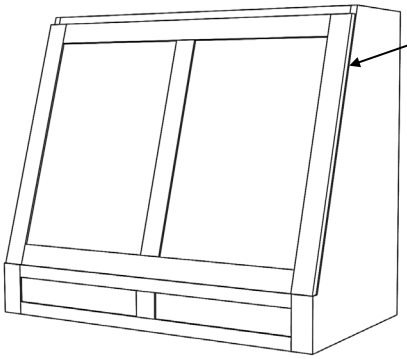

FX300 Series shown with 2 Base Door Panels and2 Upper Door Panels (FX300BPUP 2-2)

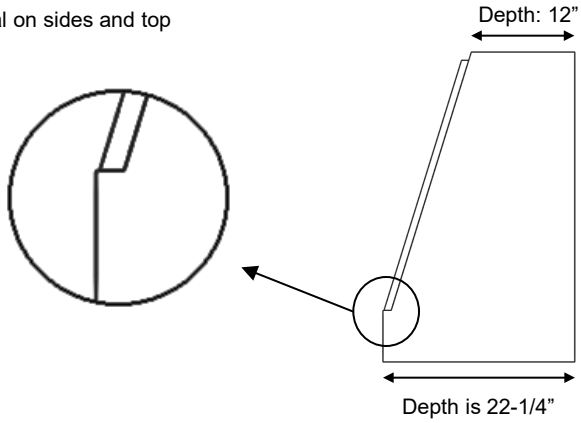

FX300 Series

Standard Widths	30, 36, 42, 48, 54, 60 (Reduced widths available) *Minimum Width 30”
Standard Heights	24, 30, 36, 42, 48 (Reduced heights available)
Removable Options	Hoods with an upper door panel option - Removable Panel is standard Hoods without an upper door panel option – No Removable Panel
Available Options	Hardwood Battens (See batten options page) Applied Molding Wrap (See options page) Applied Hardwood Wrap (See options page) 12” Top Depth can be modified by request.
Standard Assumptions	Base door panels must be flat.
Ventilation	Hood will be same width as available vent width. Example: To use a 36” vent model, the hood should be a minimum of 36” wide
Grain Direction	Vertical (Front base panel is horizontal, except Standard FX300 model will be vertical) FX300 & FX300BP Hoods over 48” wide will have horizontal grain

700 South Glaspie Street • Oxford, MI 48371 • (248) 572-6880 • email: sales@wood-hood.com • www.wood-hood.com

Copyright Stanisci Design 2026 rights reserved

Previously Named: FX

STANISCI DESIGN

Foxcote - FX300 Series

In-Series

Standard Widths: 30, 36, 42, 48, 54, 60

Standard Heights: 24, 30, 36, 42, 48

FX300

FX300

FX300	30
FX300	36
FX300	42
FX300	48
FX300H	54*
FX300H	60*

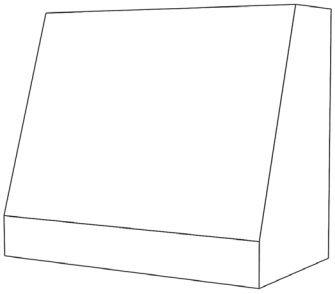

* Hoods over 48” wide will have horizontal grain on tapered front, sides, and base.

FX300BP

FX300BP -1

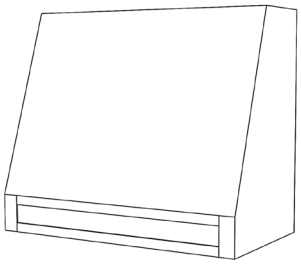

FX300BP -2

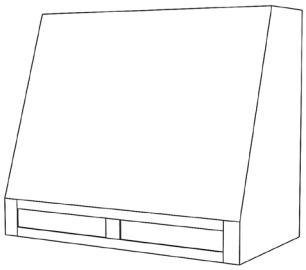

FX300BP -3

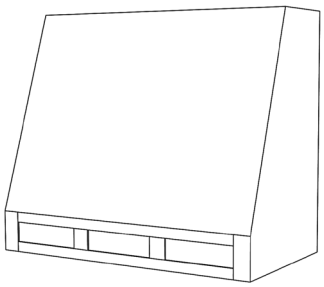

FX300BP

FX300BP	30
FX300BP	36
FX300BP	42
FX300BP	48
FX300BP-H	54*
FX300BP-H	60*

* Hoods over 48” wide will have horizontal grain on tapered front, sides, and base.

FX300UP

FX300UP -1 *

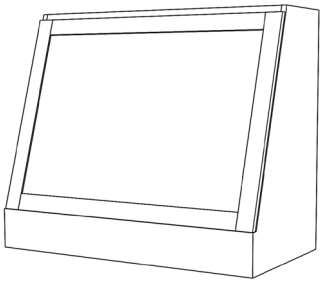

FX300UP -2 **

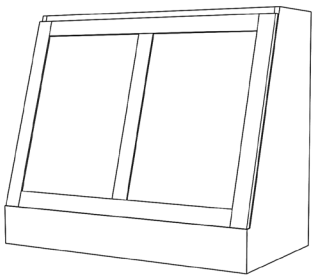

FX300UP -3

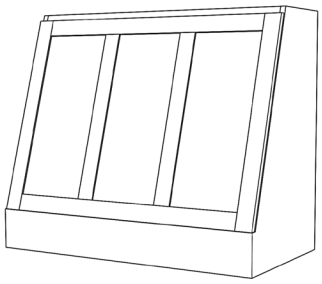

FX300UP

FX300UP	30
FX300UP	36
FX300UP	42
FX300UP	48
FX300UP	54 **
FX300UP	60 **

* In all sizes, 1 upper panel option requires Paint Grade.

** Hoods over 48” wide, 2 upper panel option requires Paint Grade.

** NOTE: Top Door on FX300 is Fixed when Height is below 24"H

700 South Glaspie Street • Oxford, MI 48371 • (248) 572-6880 • email: sales@wood-hood.com • www.wood-hood.com

Copyright Stanisci Design 2026 rights reserved

Previously Named: FX

STANISCI DESIGN

Foxcote - FX300 Series

In-Series

Standard Widths: 30, 36, 42, 48, 54, 60
Standard Heights: 24, 30, 36, 42, 48

FX300BPUP 1-1*

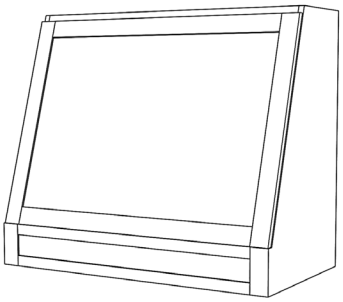

FX300BPUP 1-2**

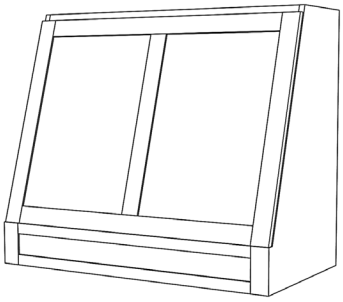

FX300BPUP 1-3

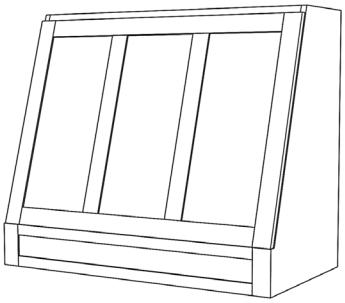

FX300BPUP 2-1*

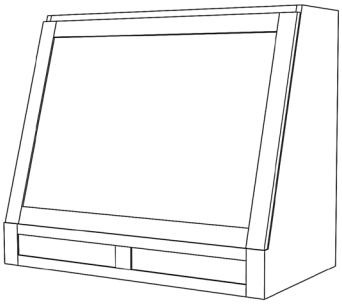

FX300BPUP 2-2**

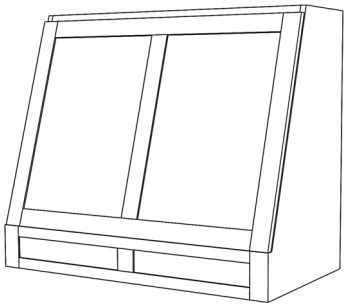

FX300BPUP 2-3

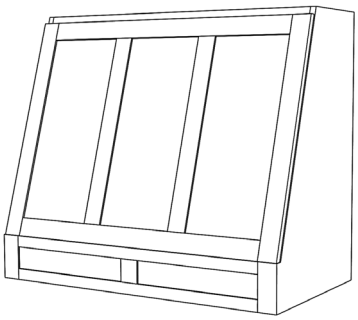

FX300BPUP 3-1*

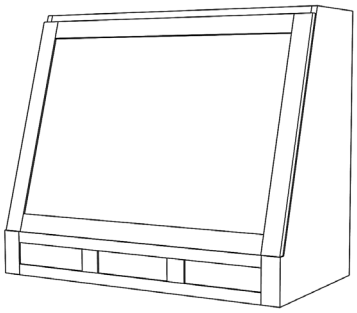

FX300BPUP 3-2**

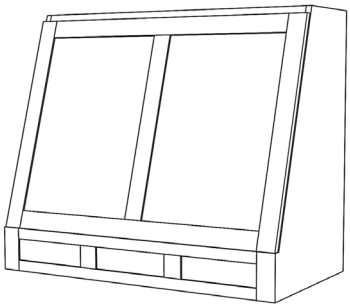

FX300BPUP 3-3

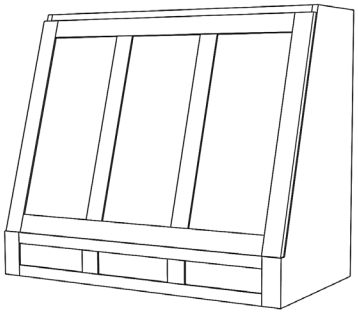

* In all sizes, 1 upper panel option requires Paint Grade.

** Hoods over 48” wide, 2 upper panel option requires Paint Grade.

** NOTE: Top Door on FX300 is Fixed when Height is below 24"H

700 South Glaspie Street • Oxford, MI 48371 • (248) 572-6880 • email: sales@wood-hood.com • www.wood-hood.com

Copyright Stanisci Design 2026 rights reserved

G vs. GT Chimney Hoods

The G and GT Series hood are identical chimney style hoods however, the G Series is made for a shorter style hood while the GT Series is made for a taller style hood.

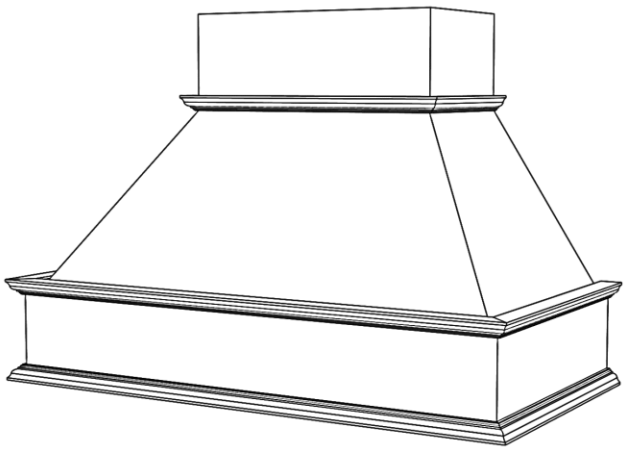

G Series shown with Standard Base
36 x 30

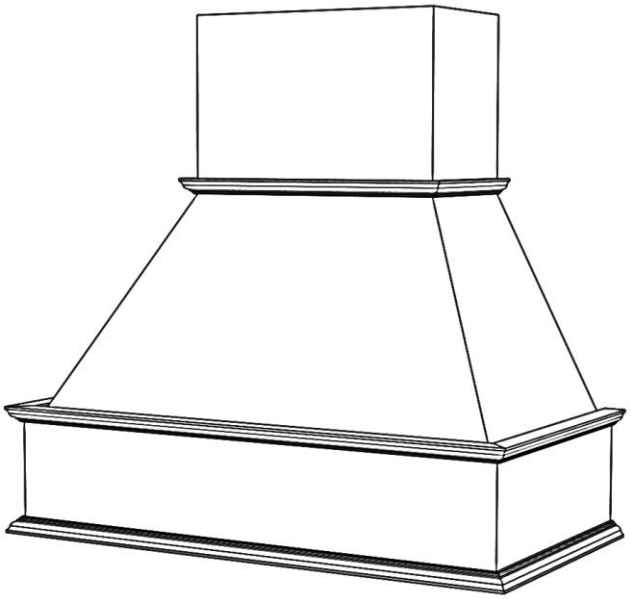

GT Series shown with Standard Base
36 x 42

(GT-Series was previously named T-Series)

700 South Glaspie Street • Oxford, MI 48371 • (248) 572-6880 • email: sales@wood-hood.com • www.wood-hood.com

Copyright Stanisci Design 2026 rights reserved

Georgetown - G Series

Free Standing

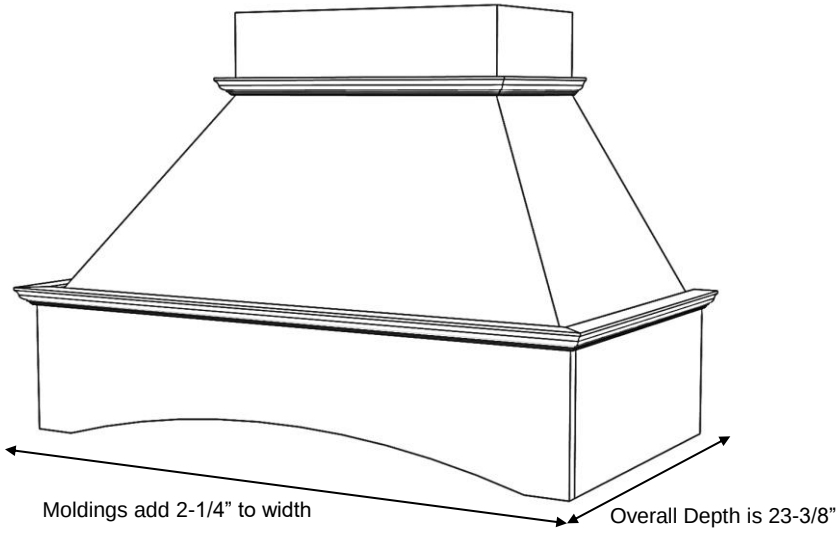

G Series shown with SL Base (GSL) and #1 Classic moldings

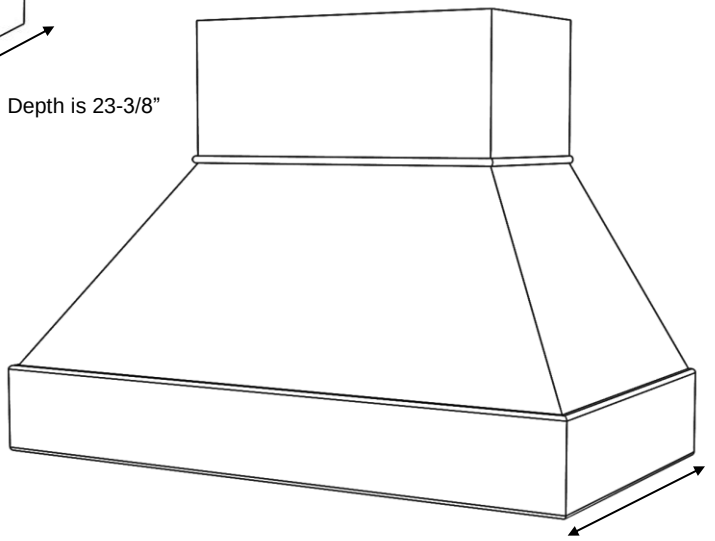

G Series shown with Hardwood Base (GHW)

G Series

Standard Widths	36, 42, 48, 54, 60 (Reduced widths available)
Standard Heights	30 (Modified heights available) Chimney can be trimmed in the field
Removable Options	Removable Top (RT) – see modifications section. Applied Removable Panel (ARP) – see modifications section.
Ventilation	Hood will be same width as available vent width. Example: To use a 36” vent model, the hood should be a minimum of 36” wide
Available Moldings	#1 Classic, #2 Simple, #3 Basic
Grain Direction	Vertical (Base is horizontal)

700 South Glaspie Street • Oxford, MI 48371 • (248) 572-6880 • email: sales@wood-hood.com • www.wood-hood.com

Copyright Stanisci Design 2026 rights reserved

Georgetown - G Series

Free Standing

Standard Height: 30

G- Standard Base

G 36
G 42
G 48
G 54
G 60

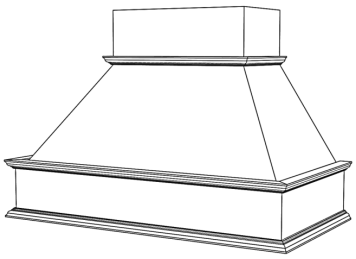

G- Hardwood Base

GHW 36
GHW 42
GHW 48
GHW 54
GHW 60

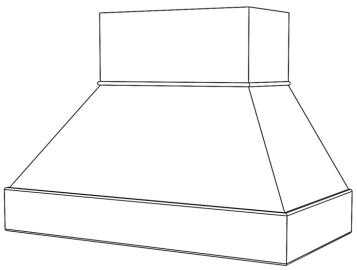

G- RS Base

GRS 36
GRS 42
GRS 48
GRS 54
GRS 60

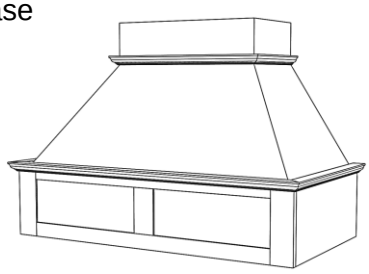

G- RSS Base

GRSS 36
GRSS 42
GRSS 48
GRSS 54
GRSS 60

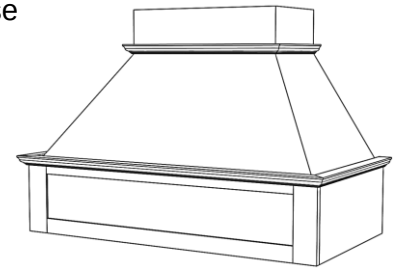

G- RA Base

GRA 36
GRA 42
GRA 48
GRA 54
GRA 60

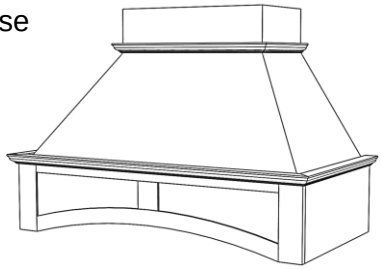

G- DP2 Base

GDP2 36
GDP2 42
GDP2 48
GDP2 54
GDP2 60

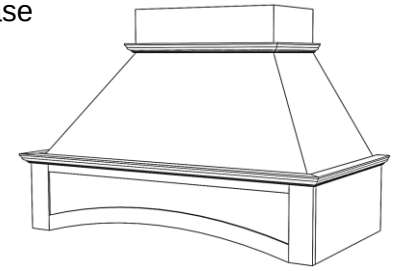

G- SL Base

GSL 36
GSL 42
GSL 48
GSL 54
GSL 60

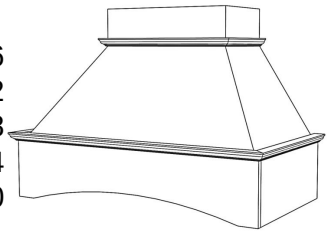

G- DP1 Base

GDP1 36
GDP1 42
GDP1 48
GDP1 54
GDP1 60

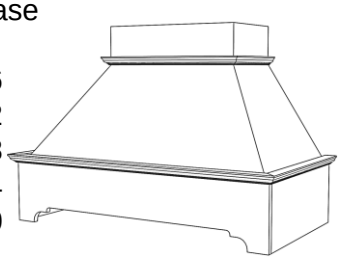

G- SS Base

GSS 36
GSS 42
GSS 48
GSS 54
GSS 60

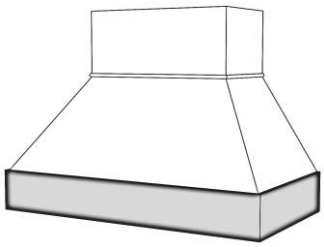

700 South Glaspie Street • Oxford, MI 48371 • (248) 572-6880 • email: sales@wood-hood.com • www.wood-hood.com

Copyright Stanisci Design 2026 rights reserved

Previously Named: T

STANISCI DESIGN

Thompson - GT Series

Free Standing

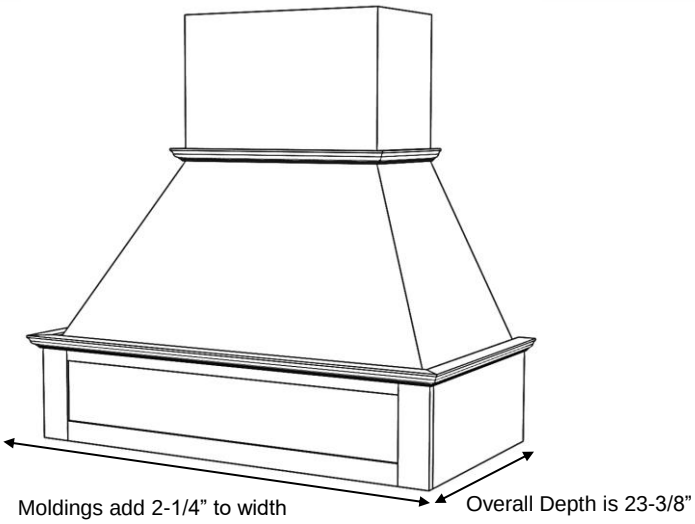

GT Series shown with RSS Base (GTRSS) and #1 Classic moldings

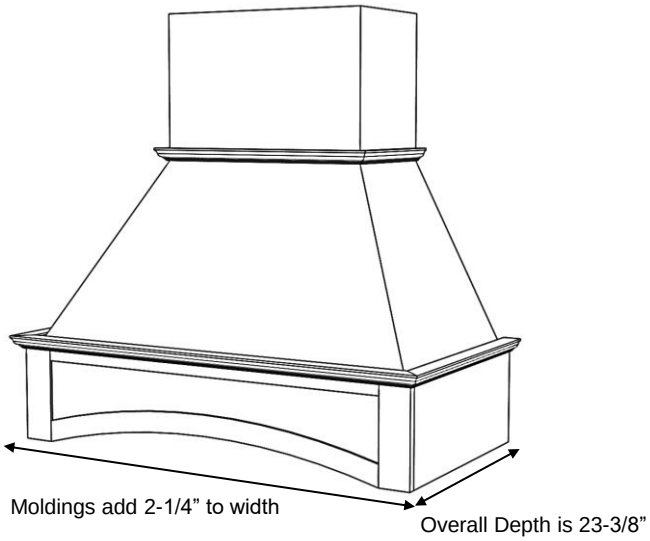

GT Series shown with DP2 Base (GTDP2) and #1 Classic moldings

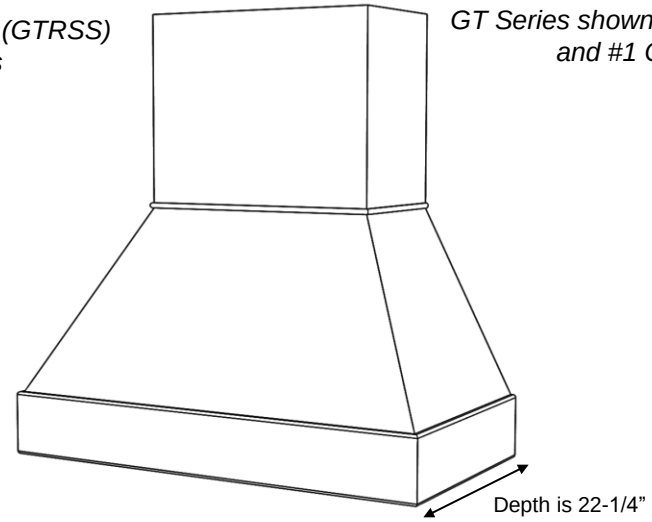

GT Series shown with Hardwood Base (GTHW)

GT Series

Standard Widths	36, 42, 48, 54, 60 (Reduced widths available)
Standard Heights	42" (Modified heights available) Chimney can be trimmed in the field
Removable Options	Removable Top (RT) – see modifications section. Applied Removable Panel (ARP) – see modifications section.
Ventilation	Hood will be same width as available vent width. Example: To use a 36" vent model, the hood should be a minimum of 36" wide
Available Moldings	#1 Classic, #2 Simple #3 Basic
Grain Direction	Vertical (Base is horizontal)

700 South Glaspie Street • Oxford, MI 48371 • (248) 572-6880 • email: sales@wood-hood.com • www.wood-hood.com

Copyright Stanisci Design 2026 rights reserved

Previously Named: T

STANISCI DESIGN

Thompson - GT Series

Free Standing

Standard Height: 42

GT- Standard Base

GT 36
GT 42
GT 48
GT 54
GT 60

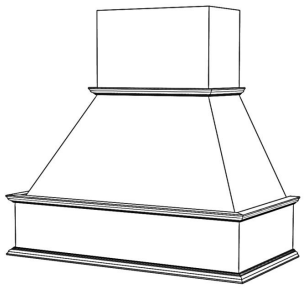

GT- Hardwood Base

GTHW 36
GTHW 42
GTHW 48
GTHW 54
GTHW 60

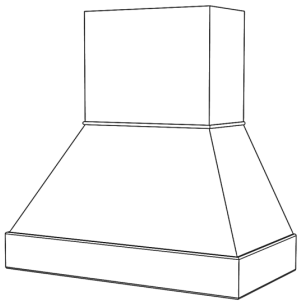

GT- RS Base

GTRS 36
GTRS 42
GTRS 48
GTRS 54
GTRS 60

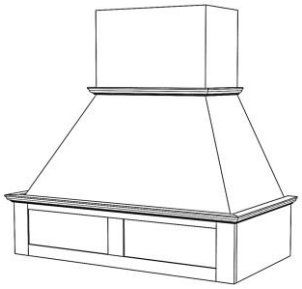

GT- RSS Base

GTRSS 36
GTRSS 42
GTRSS 48
GTRSS 54
GTRSS 60

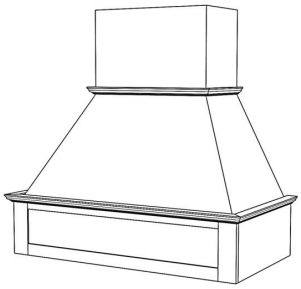

GT- RA Base

GTRA 36
GTRA 42
GTRA 48
GTRA 54
GTRA 60

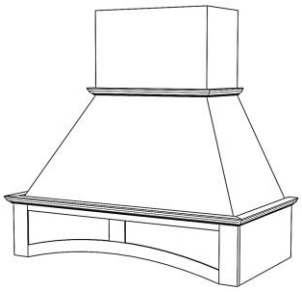

GT- DP2 Base

GTDP2 36
GTDP2 42
GTDP2 48
GTDP2 54
GTDP2 60

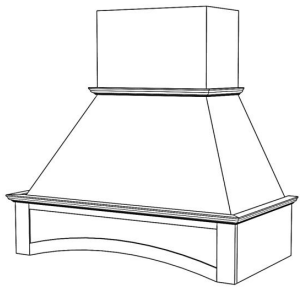

GT- SL Base

GTSL 36
GTSL 42
GTSL 48
GTSL 54
GTSL 60

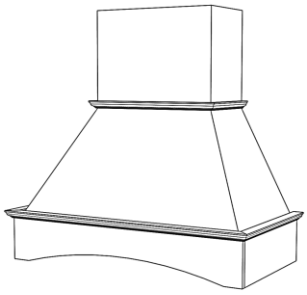

GT- DP1 Base

GTDP1 36
GTDP1 42
GTDP1 48
GTDP1 54
GTDP1 60

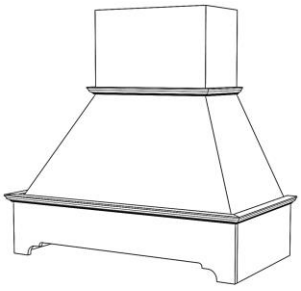

GT- SS Base

GTSS 36
GTSS 42
GTSS 48
GTSS 54
GTSS 60

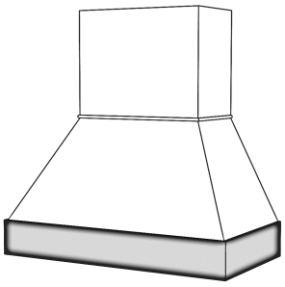

700 South Glaspie Street • Oxford, MI 48371 • (248) 572-6880 • email: sales@wood-hood.com • www.wood-hood.com

Copyright Stanisci Design 2026 rights reserved

Hartford - H Series

In-Series

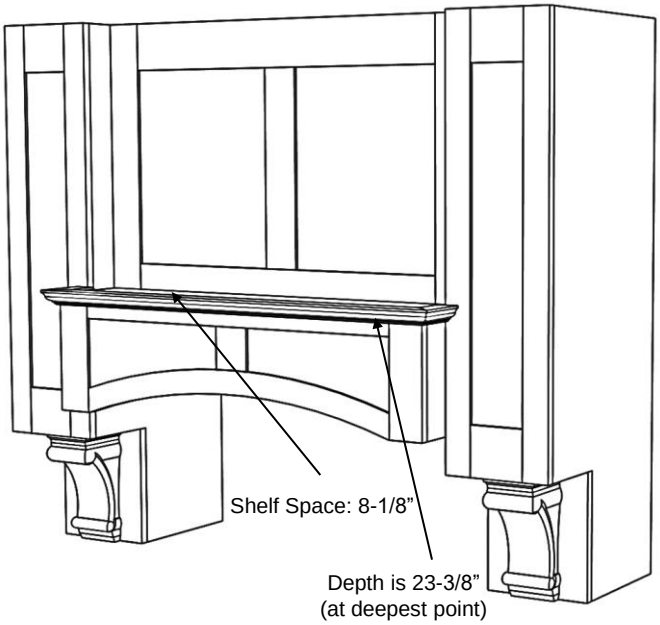

H Series shown with RA Base (HRA)
#1 Classic molding, and optional corbels
(48” – 60” wide will have 2 center panels)

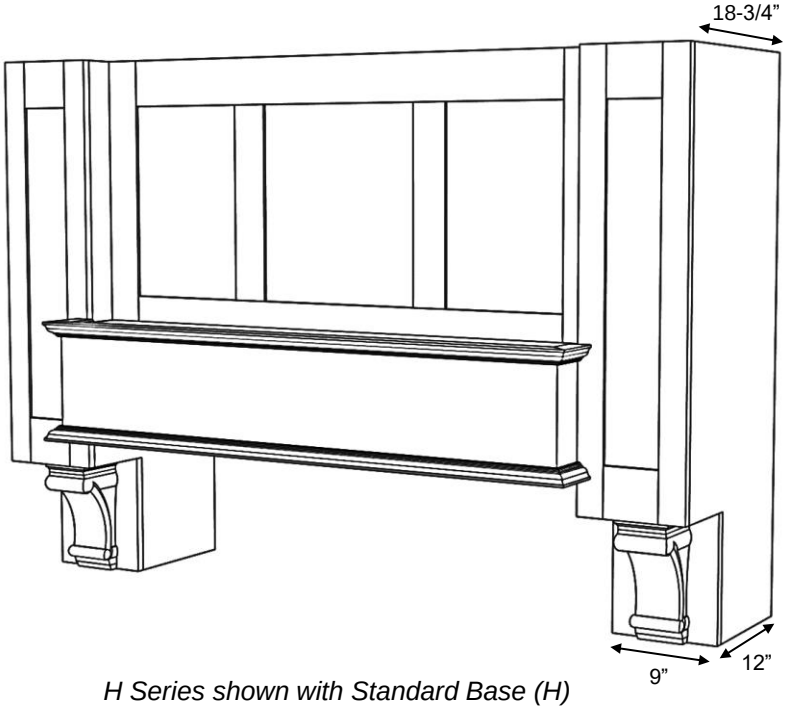

H Series shown with Standard Base (H)
#1 Classic molding, and optional corbels
(66” – 78” wide will have 3 center panels)

H Series

Standard Widths	48, 54, 60, 66, 72, 78 (Reduced widths available) To calculate minimum width, take range width plus 18”. Example: A 36” range would get a 54” wide hood. (36 + 18 = 54)
Standard Heights	38, 44, 50, 56, 62 (Reduced heights available) To calculate height, take ceiling height minus 52”. Example: A 96” ceiling would have a 44” tall hood. (96 - 52 = 44)
Removable Options	Removable Panel is standard (MRP) 2” fixed top rail available by request (MRP-2TR) – see modifications section.
Ventilation	Hood must be a minimum of 18” wider than available vent width. Example: To use a 36” vent model, the hood should be a minimum of 54” wide
Available Moldings	#1 Classic, #2 Simple, #3 Basic
Available Options	Corbels - All Stanisci corbel options will fit this design (See corbel options page)
Grain Direction	Vertical (Base is horizontal)

700 South Glaspie Street • Oxford, MI 48371 • (248) 572-6880 • email: sales@wood-hood.com • www.wood-hood.com

Copyright Stanisci Design 2026 rights reserved

Hartford – H Series

In-Series

Standard Heights: 38, 44, 50, 56, 62

H- Standard Base

H 48
H 54
H 60
H 66*
H 72*
H 78*

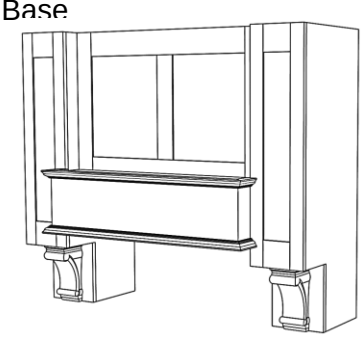

H- Hardwood Base

HHW 48
HHW 54
HHW 60
HHW 66*
HHW 72*
HHW 78*

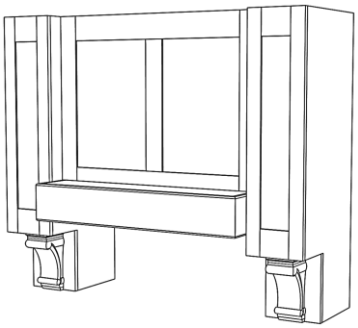

H- RS Base

HRS 48
HRS 54
HRS 60
HRS 66*
HRS 72*
HRS 78*

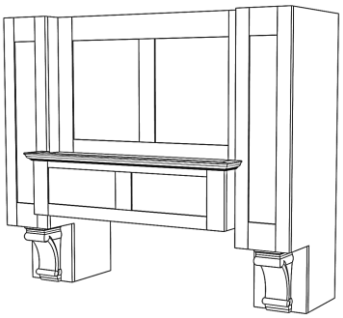

H- RSS Base

HRSS 48
HRSS 54
HRSS 60
HRSS 66*
HRSS 72*
HRSS 78*

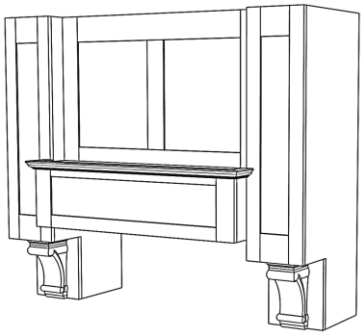

H- RA Base

HRA 48
HRA 54
HRA 60
HRA 66*
HRA 72*
HRA 78*

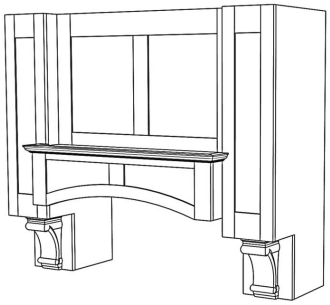

H- DP2 Base

HDP2 48
HDP2 54
HDP2 60
HDP2 66*
HDP2 72*
HDP2 78*

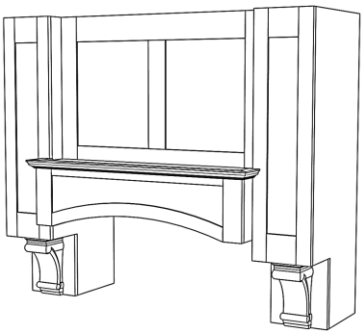

H- SL Base

HSL 48
HSL 54
HSL 60
HSL 66*
HSL 72*
HSL 78*

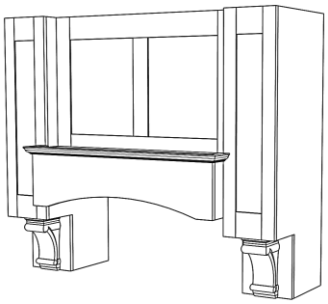

H- DP1 Base

HDP1 48
HDP1 54
HDP1 60
HDP1 66*
HDP1 72*
HDP1 78*

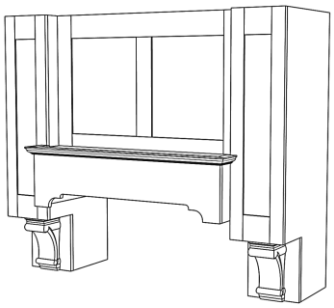

* Top center panel is three panels rather than two, due to width of hood.

700 South Glaspie Street • Oxford, MI 48371 • (248) 572-6880 • email: sales@wood-hood.com • www.wood-hood.com

Copyright Stanisci Design 2026 rights reserved

Huntington - H2 Series

In-Series

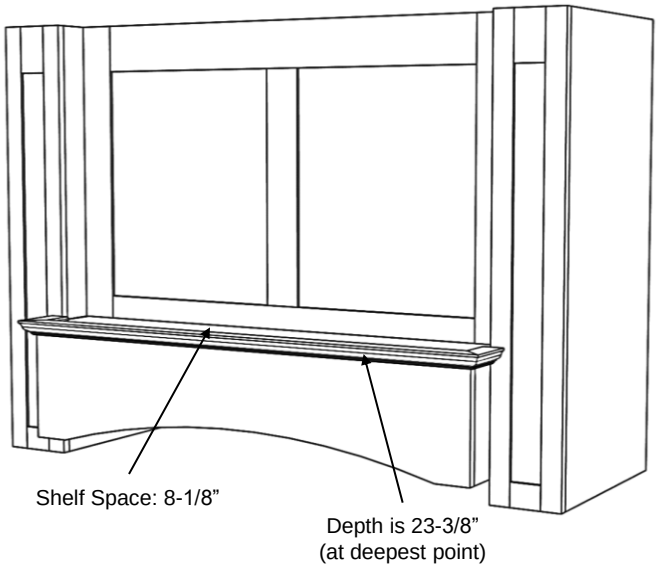

H2 Series shown with SL Base (H2SL)
and #1 Classic molding
(42” – 54” wide will have 2 center panels)

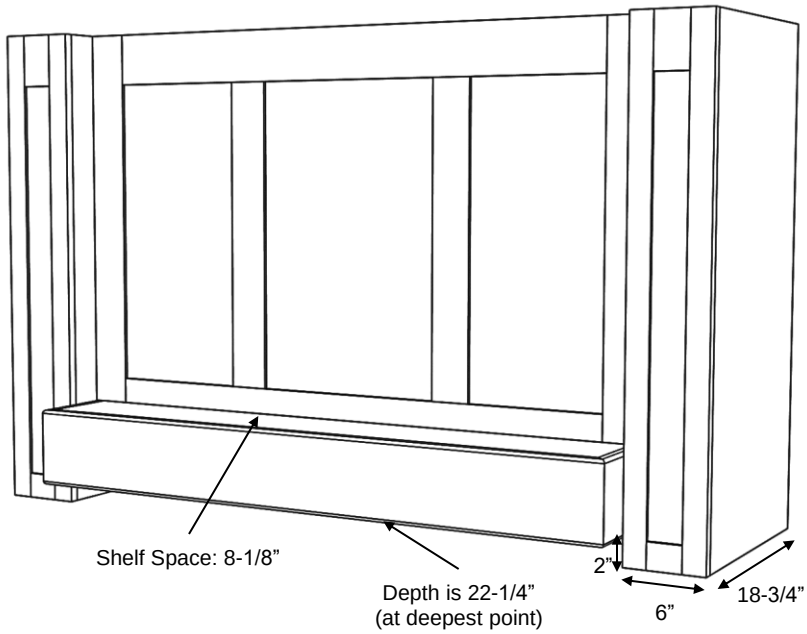

H2 Series shown with Hardwood Base (H2HW)
(60” – 72” wide will have 3 center panels)

H2 Series

Standard Widths	42, 48, 54, 60, 66, 72 (Reduced widths available) *Minimum Width 42” To calculate minimum width, take range width plus 12”. Example: A 36” range would get a 48” wide hood. (36 + 12 = 48)
Standard Heights	26, 32, 38, 44, 50 To calculate height, take ceiling height minus 64”. Example: A 96” ceiling would have a 32” tall hood. (96 - 64 = 32)
Removable Options	Removable Panel is standard (MRP) 2” fixed top rail available by request (MRP-2TR) – see modifications section.
Standard Assumptions	Side columns will always have a flat panel
Ventilation	Hood must be a minimum of 12” wider than available vent width. Example: To use a 36” vent model, the hood should be a minimum of 48” wide
Available Moldings	#1 Classic, #2 Simple, #3 Basic
Grain Direction	Vertical (Base is horizontal)

700 South Glaspie Street • Oxford, MI 48371 • (248) 572-6880 • email: sales@wood-hood.com • www.wood-hood.com

Copyright Stanisci Design 2026 rights reserved

Huntington - H2 Series

In-Series

Standard Heights: 26, 32, 38, 44, 50

H2- Standard Base

H2 42
H2 48
H2 54
H2 60*
H2 66*
H2 72*

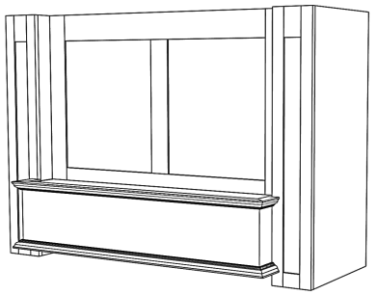

H2- Hardwood Base

H2HW 42
H2HW 48
H2HW 54
H2HW 60*
H2HW 66*
H2HW 72*

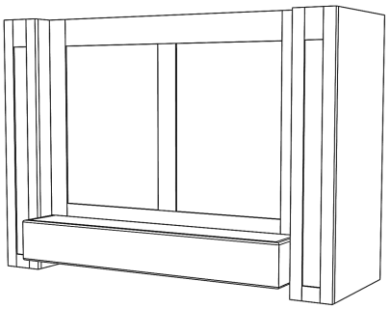

H2- RS Base

H2RS 42
H2RS 48
H2RS 54
H2RS 60*
H2RS 66*
H2RS 72*

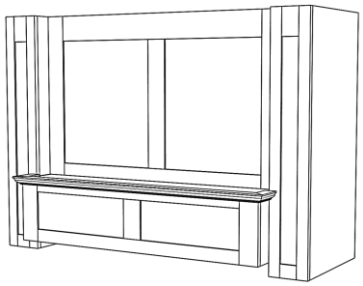

H2- RSS Base

H2RSS 42
H2RSS 48
H2RSS 54
H2RSS 60*
H2RSS 66*
H2RSS 72*

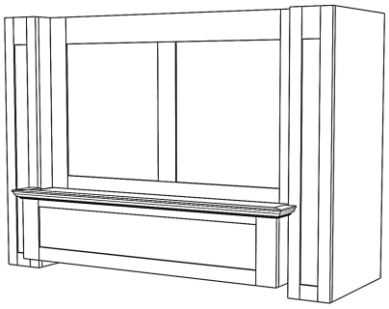

H2- RA Base

H2RA 42
H2RA 48
H2RA 54
H2RA 60*
H2RA 66*
H2RA 72*

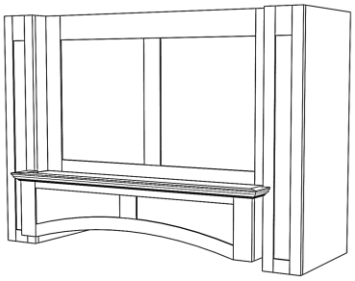

H2- DP2 Base

H2DP2 42
H2DP2 48
H2DP2 54
H2DP2 60*
H2DP2 66*
H2DP2 72*

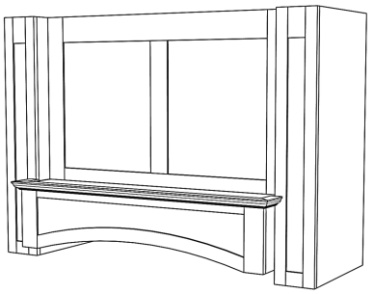

H2- SL Base

H2SL 42
H2SL 48
H2SL 54
H2SL 60*
H2SL 66*
H2SL 72*

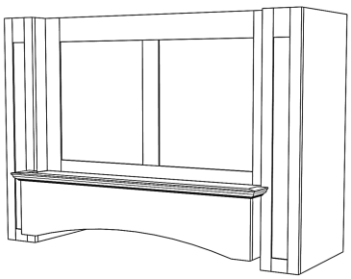

H2- DP1 Base

H2DP1 42
H2DP1 48
H2DP1 54
H2DP1 60*
H2DP1 66*
H2DP1 72*

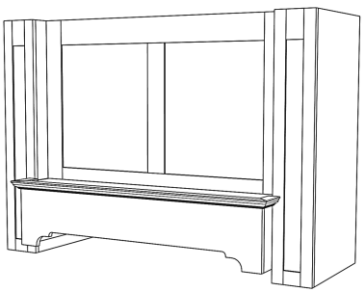

* Top center panel is three panels rather than two, due to width of hood

700 South Glaspie Street • Oxford, MI 48371 • (248) 572-6880 • email: sales@wood-hood.com • www.wood-hood.com

Copyright Stanisci Design 2026 rights reserved

Island - I Series

Island Application

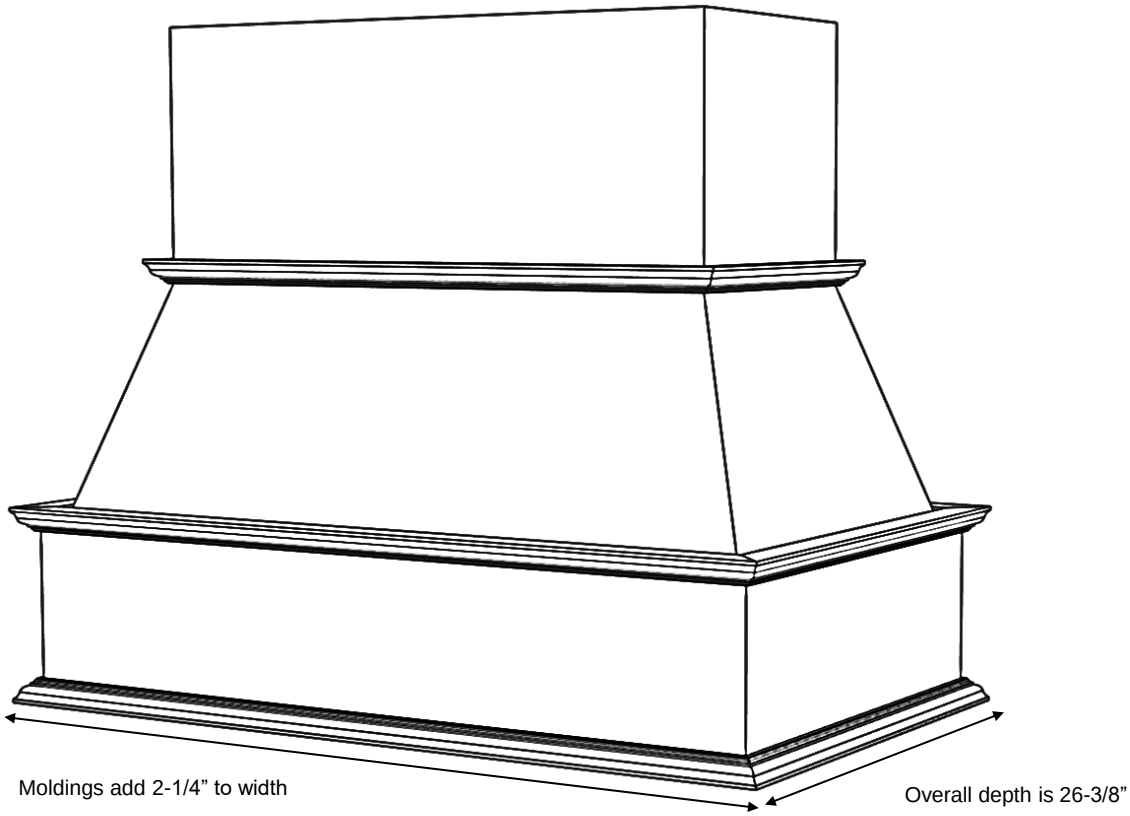

I Series shown with Standard Base (I)
and #1 Classic moldings

I Series

Standard Widths	36, 42, 48, 54, 60 (Reduced widths available) *Minimum Width 36" (Order 6" wider than cooking surface for best capture area)
Standard Heights	30, 36, 42, 48 (Reduced heights available) (Not able to be trimmed in the field)
Removable Options	Applied Removable Panel (ARP) – see modifications section.
Ventilator	Hood will be same width as available vent width. Example: To use a 36" vent model, the hood should be a minimum of 36" wide (PML – Pro Mesh Liner is the only available Stanisci vent unit for Island hood.)
Available Moldings	#1 Classic, #2 Simple, #3 Basic
Grain Direction	Vertical (Base is horizontal)

700 South Glaspie Street • Oxford, MI 48371 • (248) 572-6880 • email: sales@wood-hood.com • www.wood-hood.com

Copyright Stanisci Design 2026 rights reserved

Island - I Series

Island Application

Standard Heights: 30, 36, 42, 48

I- Standard Base

I 36
I 42
I 48
I 54
I 60

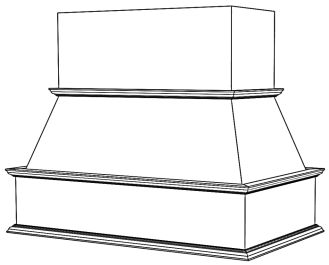

I- RS Base

IRS 36
IRS 42
IRS 48
IRS 54
IRS 60

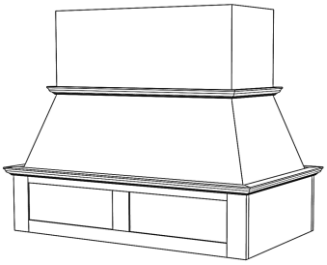

I- RSS Base

IRSS 36
IRSS 42
IRSS 48
IRSS 54
IRSS 60

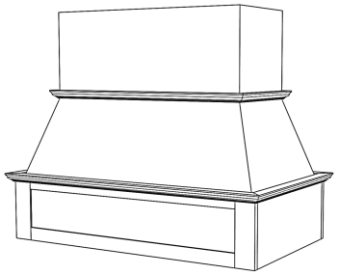

I- RA Base

IRA 36
IRA 42
IRA 48
IRA 54
IRA 60

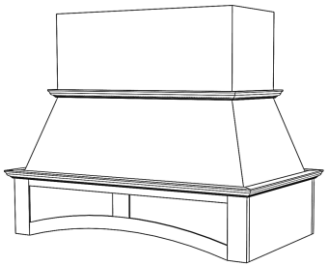

I- DP2 Base

IDP2 36
IDP2 42
IDP2 48
IDP2 54
IDP2 60

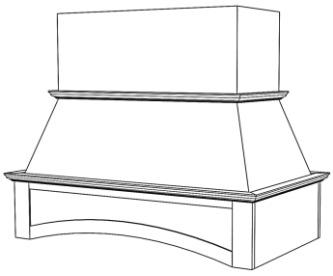

I- SL Base

ISL 36
ISL 42
ISL 48
ISL 54
ISL 60

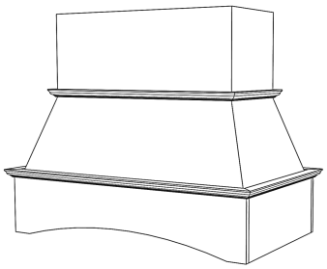

I- DP1 Base

IDP1 36
IDP1 42
IDP1 48
IDP1 54
IDP1 60

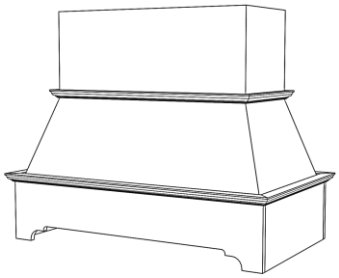

700 South Glaspie Street • Oxford, MI 48371 • (248) 572-6880 • email: sales@wood-hood.com • www.wood-hood.com

Copyright Stanisci Design 2026 rights reserved

Jacksonville - J Series

In-Series

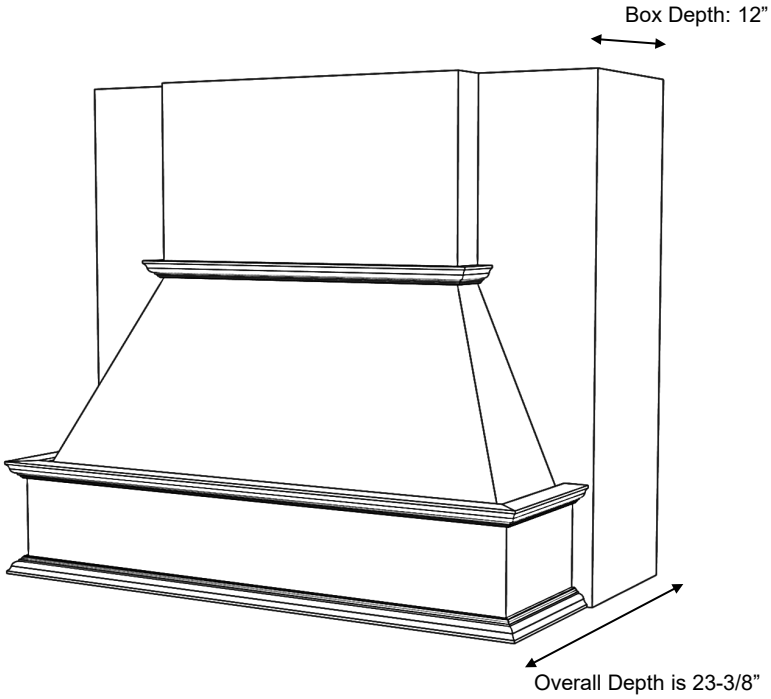

J Series shown with Standard Base (J) and #1 Classic moldings

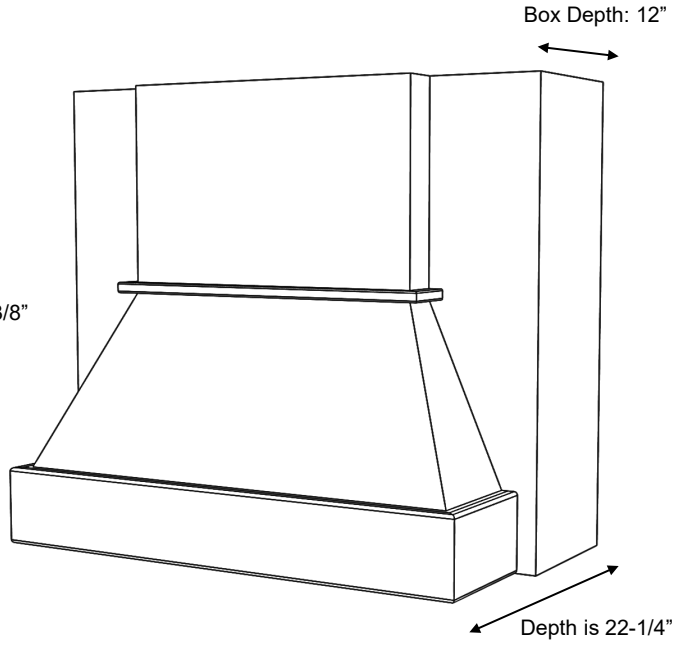

J Series shown with Hardwood Base (JHW)

J Series

Standard Widths	33, 36, 39, 42, 45, 48, 51, 54, 57, 60,63(Reduced widths available) *Minimum Width 33”
Standard Heights	30, 36, 42, 48 (Reduced heights available)
Removable Options	Removable Front (RF) – Rear Box will be 14” – see modifications section. Applied Removable Panel (ARP) – see modifications section.
Available Options	12” Rear Box can be modified by request.
Ventilation	Hood must be a minimum of 3” wider than available vent width. Example: To use a 36” vent model, the hood should be a minimum of 39” wide
Available Moldings	#1 Classic, #2 Simple, #3 Basic
Grain Direction	Vertical (Base is horizontal)

700 South Glaspie Street • Oxford, MI 48371 • (248) 572-6880 • email: sales@wood-hood.com • www.wood-hood.com

Copyright Stanisci Design 2026 all rights reserved

Jacksonville – J Series

In-Series

Standard Heights: 30, 36, 42, 48

J- Standard Base

J 33
J 36
J 39
J 42
J 45
J 48
J 51
J 54
J 57
J 60
J 63

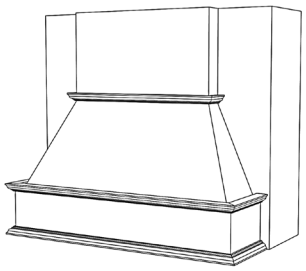

J- Hardwood Base

JHW 33
JHW 36
JHW 39
JHW 42
JHW 45
JHW 48
JHW 51
JHW 54
JHW 57
JHW 60
JHW 63

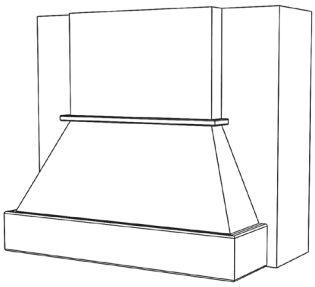

J- RS Base

JRS 33
JRS 36
JRS 39
JRS 42
JRS 45
JRS 48
JRS 51
JRS 54
JRS 57
JRS 60
JRS 63

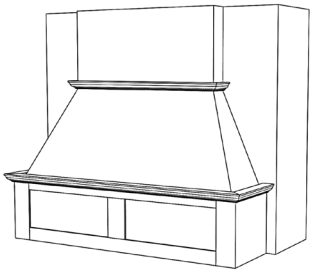

J- RSS Base

JRSS 33
JRSS 36
JRSS 39
JRSS 42
JRSS 45
JRSS 48
JRSS 51
JRSS 54
JRSS 57
JRSS 60
JRSS 63

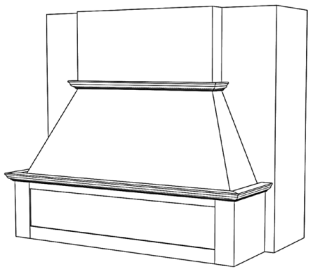

J- RA Base

JRA 33
JRA 36
JRA 39
JRA 42
JRA 45
JRA 48
JRA 51
JRA 54
JRA 57
JRA 60
JRA 63

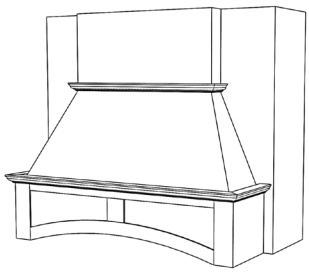

J- DP2 Base

JDP2 33
JDP2 36
JDP2 39
JDP2 42
JDP2 45
JDP2 48
JDP2 51
JDP2 54
JDP2 57
JDP2 60
JDP2 63

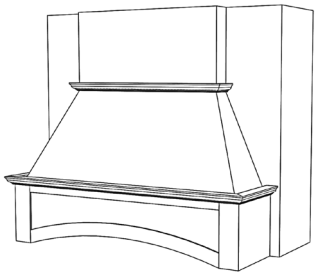

J- SL Base

JSL 33
JSL 36
JSL 39
JSL 42
JSL 45
JSL 48
JSL 51
JSL 54
JSL 57
JSL 60
JSL 63

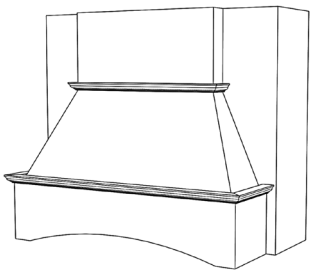

J- DP1 Base

JDP1 33
JDP1 36
JDP1 39
JDP1 42
JDP1 45
JDP1 48
JDP1 51
JDP1 54
JDP1 57
JDP1 60
JDP1 63

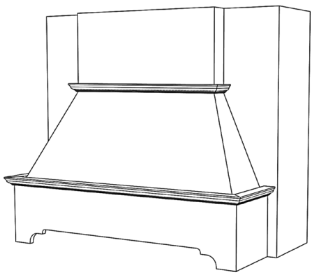

700 South Glaspie Street • Oxford, MI 48371 • (248) 572-6880 • email: sales@wood-hood.com • www.wood-hood.com

Copyright Stanisci Design 2026 all rights reserved

Kingston – K200 Series

Free Standing

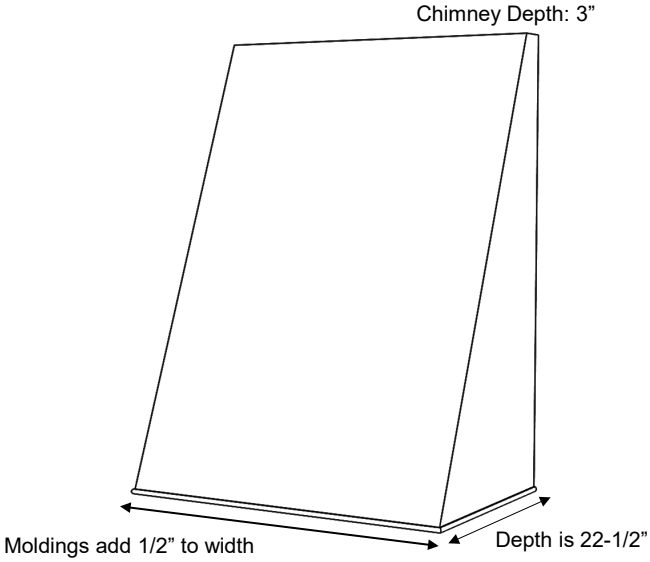

K200 shown 30 wide x 42 high (K200)

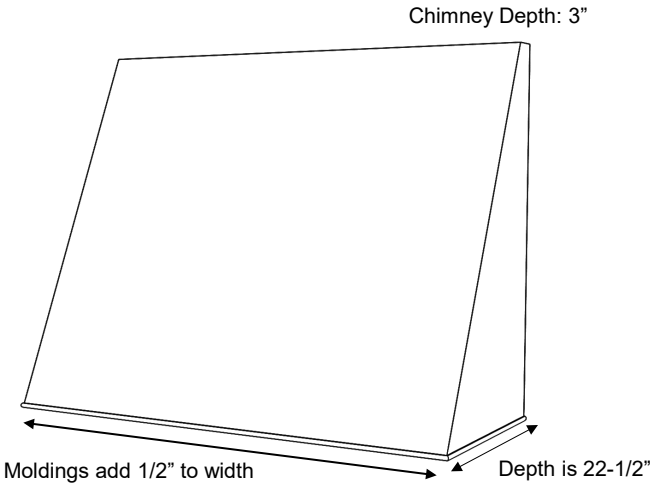

K200 shown 54 wide x 42 high (K200)

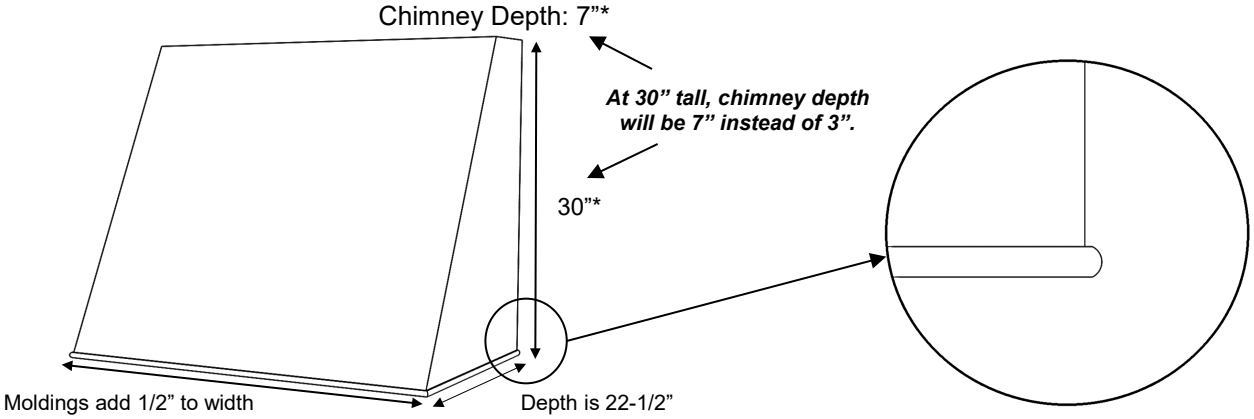

K200 shown 36 wide x 30 high (K200)

K200 Series

Standard Widths	30, 36, 42, 48, 54, 60 (Reduced widths available) *Minimum Width 30”
Standard Heights	30, 36, 42, 48, 54, 60 (Reduced heights available)
Removable Options	Not available
Ventilation	Hood will be same width as available vent width. Example: To use a 36” vent model, the hood should be a minimum of 36” wide (PML- Special Depth 18-1/8” Pro Mesh Liner is only available Stanisci vent unit) Ventilation must be ducted out of the rear of the hood. NOTE: K200 Not Available with 1200 CFM Motor due to duct size
Grain Direction	Vertical Hoods over 48” wide will have horizontal grain

700 South Glaspie Street • Oxford, MI 48371 • (248) 572-6880 • email: sales@wood-hood.com • www.wood-hood.com

Copyright Stanisci Design 2026 all rights reserved

Kingston – K200 Series

Free Standing

Standard Heights: 30**, 36, 42, 48, 54, 60

K200

K200 30
K200 36
K200 42
K200 48
K200H 54*
K200H 60*

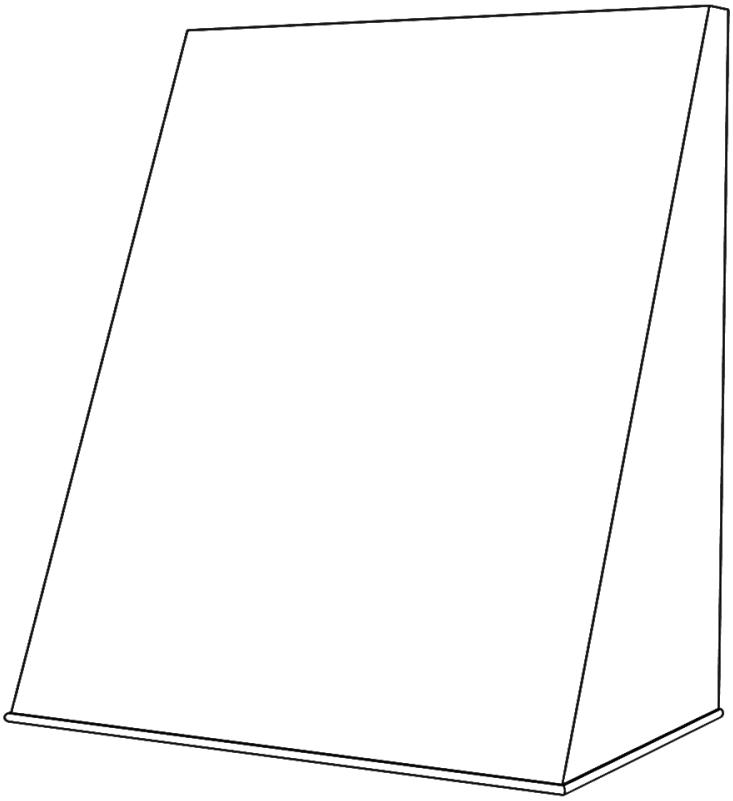

* Hoods over 48” wide have a maximum height of 42” and will have horizontal grain.

** At 30” tall, the top depth will be 7” instead of 3”.

700 South Glaspie Street • Oxford, MI 48371 • (248) 572-6880 • email: sales@wood-hood.com • www.wood-hood.com

Copyright Stanisci Design2026 all rightreserved rights reserved

Kilgore - K300 Series

In-Series

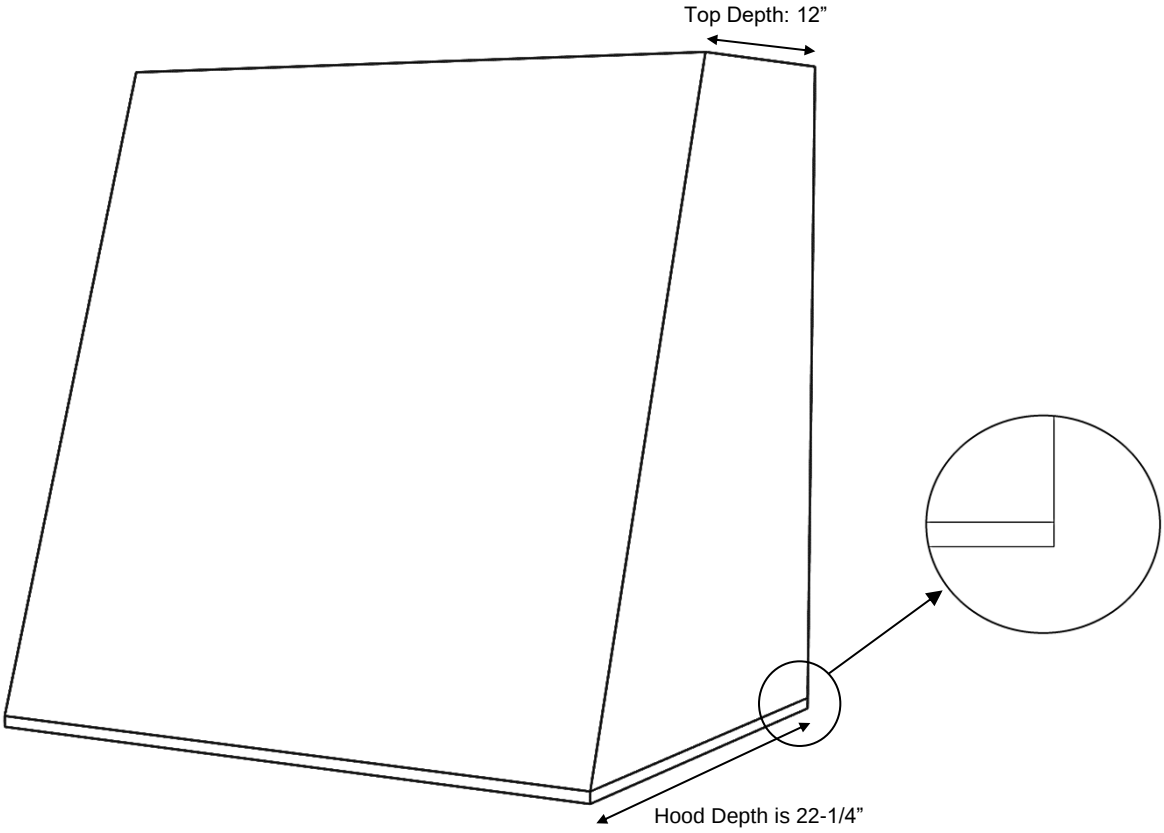

K300 Series Hood (K300)

K300 Series

Standard Widths	30, 36, 42, 48, 54, 60 (Reduced widths available) *Minimum Width 30”
Standard Heights	30, 36, 42, 48, 54, 60 (Reduced heights available)
Removable Options	Not available
Ventilation	Hood will be same width as available vent width. Example: To use a 36” vent model, the hood should be a minimum of 36” wide. (PML – Special Depth 18-1/8” Pro Mesh Liner is only available Stanisci vent unit)
Grain Direction	• Vertical • Hoods over 48” wide will have horizontal grain

700 South Glaspie Street • Oxford, MI 48371 • (248) 572-6880 • email: sales@wood-hood.com • www.wood-hood.com

Copyright Stanisci Design 2026 rights reserved

Kilgore - K300 Series

In-Series

Standard Heights: 30, 36, 42, 48, 54, 60

K300

K300 30
K300 36
K300 42
K300 48
K300H 54*
K300H 60*

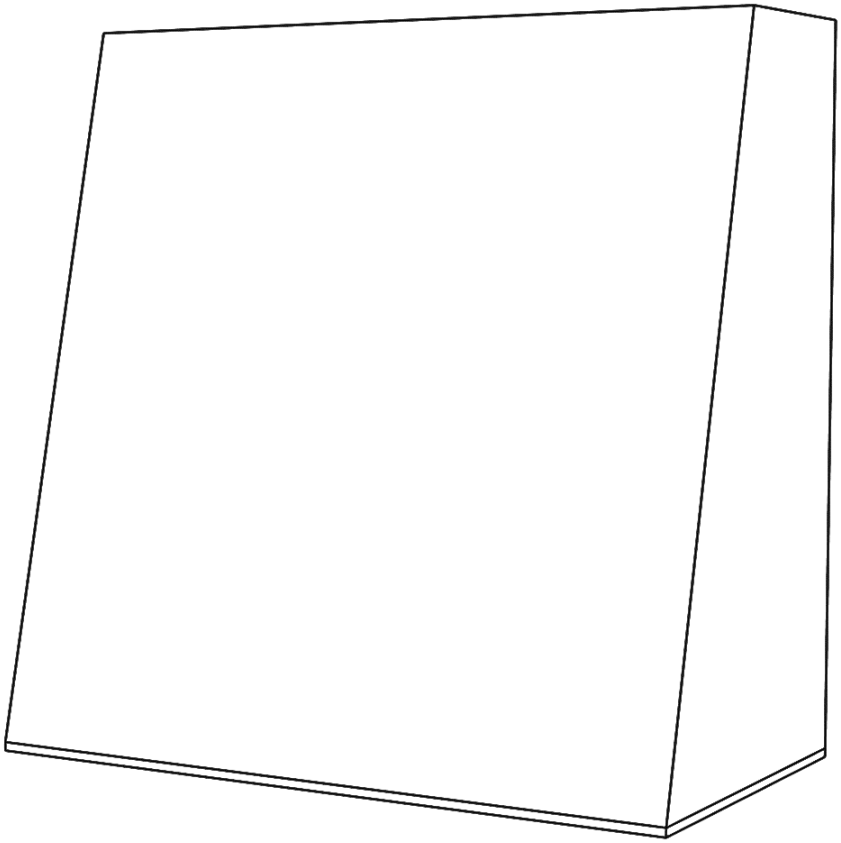

* Hoods over 48” wide have a maximum height of 42” and will have horizontal grain.

700 South Glaspie Street • Oxford, MI 48371 • (248) 572-6880 • email: sales@wood-hood.com • www.wood-hood.com

Copyright Stanisci Design 2026 rights reserved

Lexington - L Series

In-Series

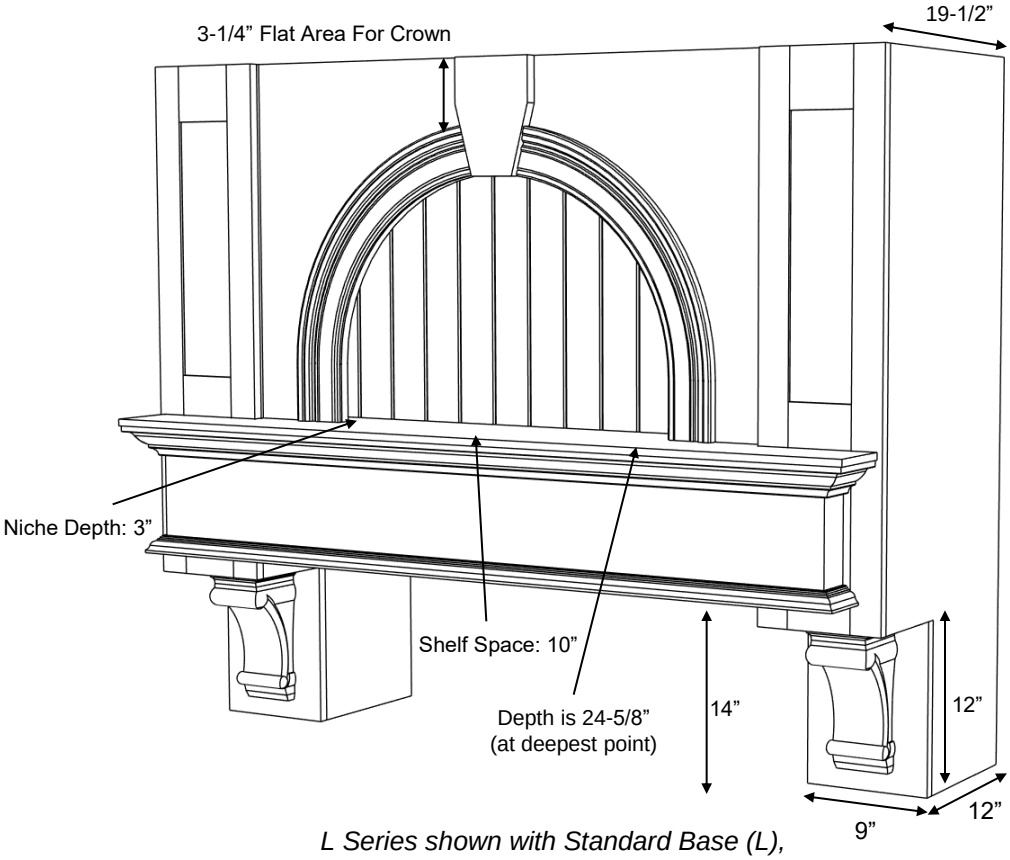

L Series shown with Standard Base (L),
#1 Classic moldings and optional Corbels

L Series

Standard Widths	48, 54, 60, 66, 72, 78 (Reduced widths available) To calculate minimum width, take range width plus 18”. Example: A 36” range would get a 54” wide hood. (36 + 18 = 54)
Standard Heights	44, 50, 56, 62 (Reduced heights available) To calculate height, take ceiling height minus 52”. Example: A 96” ceiling would have a 44” tall hood. (96 - 52 = 44)
Removable Options	Removable Panel is standard (Two seams in beading to allow for access) Non-bead panel by request – will not be removable (NBNA) - see modifications section.
Available Options	Corbels (All Stanisci corbels will fit this design)
Ventilation	Hood must be a minimum of 18” wider than available vent width. Example: To use a 36” vent model, the hood should be a minimum of 54” wide.
Available Moldings	#1 Classic, #2 Simple
Grain Direction	Vertical (Base is horizontal)

700 South Glaspie Street • Oxford, MI 48371 • (248) 572-6880 • email: sales@wood-hood.com • www.wood-hood.com

Copyright Stanisci Design 2026 rights reserved

Lexington - L Series

In-Series

Standard Heights: 44, 50, 56, 62

L- Standard Base

L 48
L 54
L 60
L 66
L 72
L 78

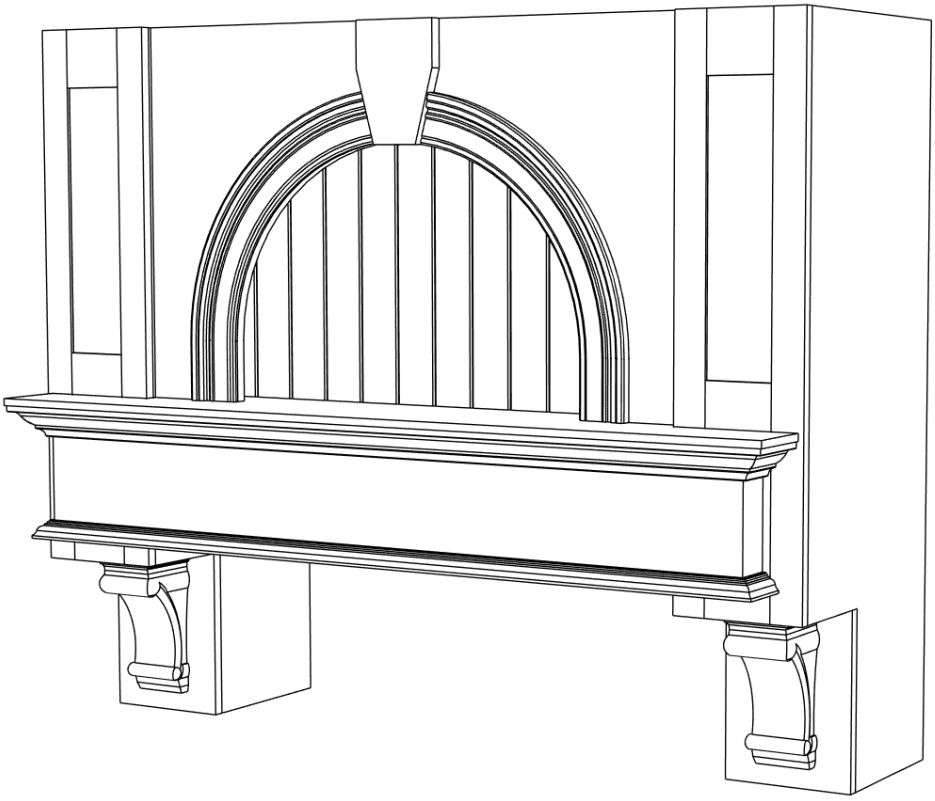

700 South Glaspie Street • Oxford, MI 48371 • (248) 572-6880 • email: sales@wood-hood.com • *www.wood-hood.com*

Copyright Stanisci Design 2026 rights reserved

Lincoln – L2 Series

In-Series

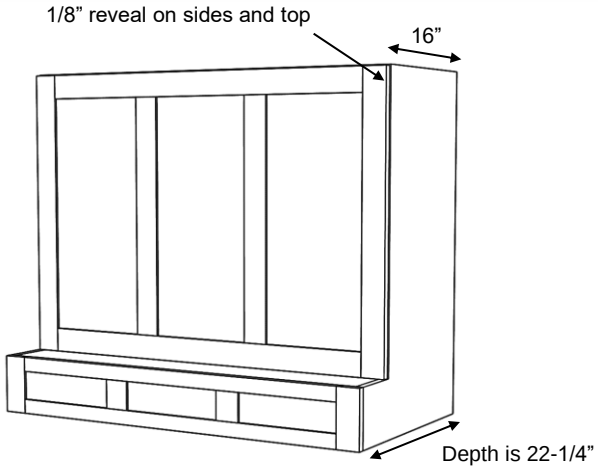

L2 Series shown with 3 Upper Door Panels and 3 Base Door Panels (L2BPUP 3-3)

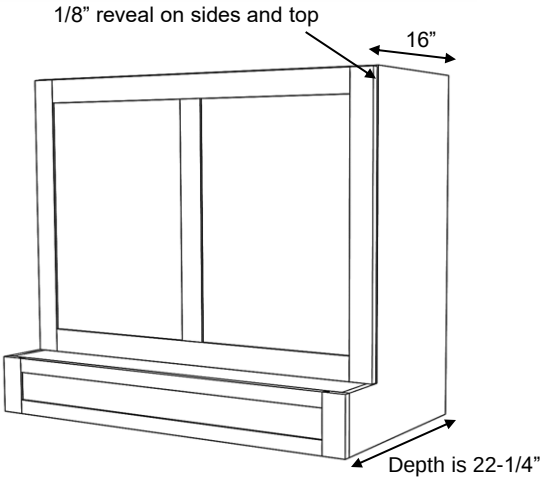

L2 Series shown with 2 Upper Door Panels and 1 Base Door Panel (L2BPUP 1-2)

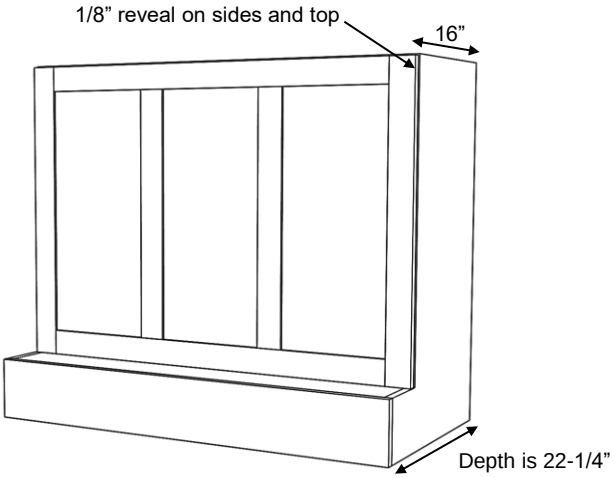

L2 Series shown with 3 Upper Door Panels And Hardwood Slab (L2UP -3)

L2 Series	
Standard Widths	30, 36, 42, 48, 54, 60 (Reduced widths available) *Minimum Width 30”
Standard Heights	24, 30, 36, 42, 48 (Reduced heights available)
Removable Options	Removable Panel - Standard
Available Options	Applied Molding Wrap (See options page) Applied Hardwood Wrap (See options page)
Standard Assumptions	Base door panels must be flat
Ventilation	Hood will be same width as available vent width. Example: To use a 36” vent model, the hood should be a minimum of 36” wide
Grain Direction	Vertical (Base is horizontal

700 South Glaspie Street • Oxford, MI 48371 • (248) 572-6880 • email: sales@wood-hood.com • www.wood-hood.com

Copyright Stanisci Design 2026 rights reserved

Lincoln – L2 Series

In-Series

Standard Widths: 30, 36, 42, 48, 54, 60

Standard Heights: 24, 30, 36, 42, 48

L2UP 1*

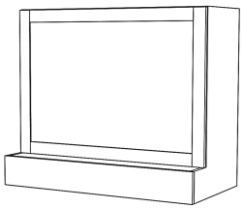

L2UP 2**

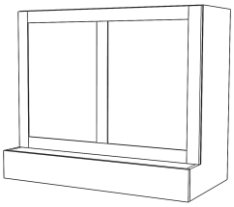

L2UP 3

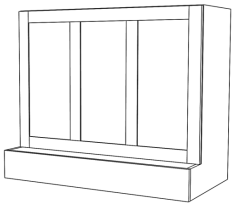

L2BPUP 1-1*

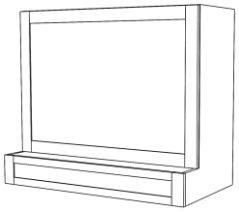

L2BPUP 1-2**

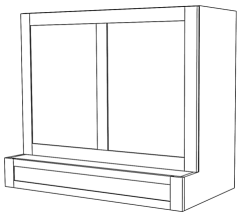

L2BPUP 1-3

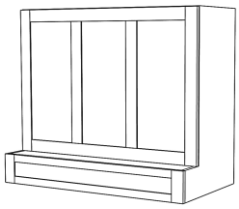

L2BPUP 2-1*

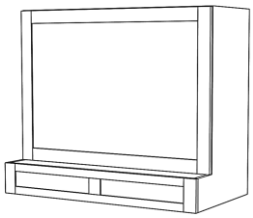

L2BPUP 2-2**

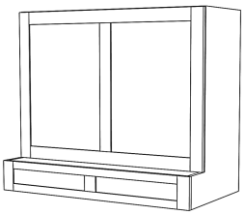

L2BPUP 2-3

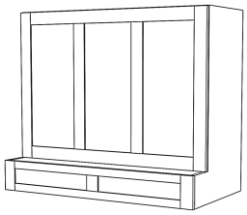

L2BPUP 3-1*

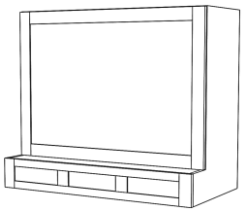

L2BPUP 3-2**

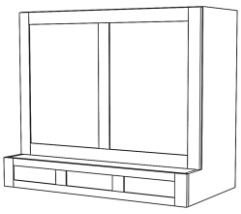

L2BPUP 3-3

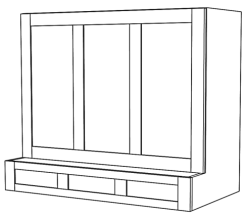

* In all sizes, 1 upper door panel option requires Paint Grade.

** Hoods over 48” wide, 2 upper door panel option requires Paint Grade.

700 South Glaspie Street • Oxford, MI 48371 • (248) 572-6880 • email: sales@wood-hood.com • www.wood-hood.com

Copyright Stanisci Design 2026 rights reserved

Madison - M Series

In-Series

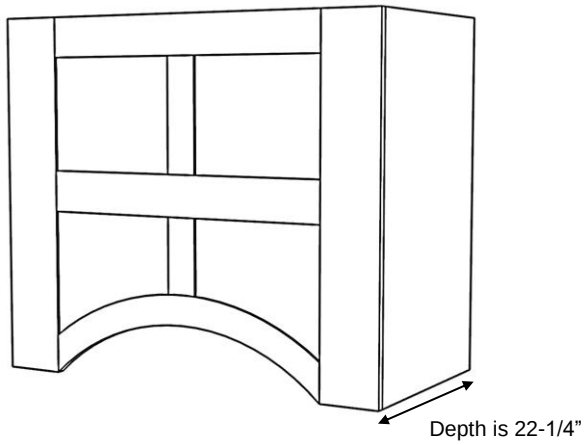

M Series shown with no shelf (M)

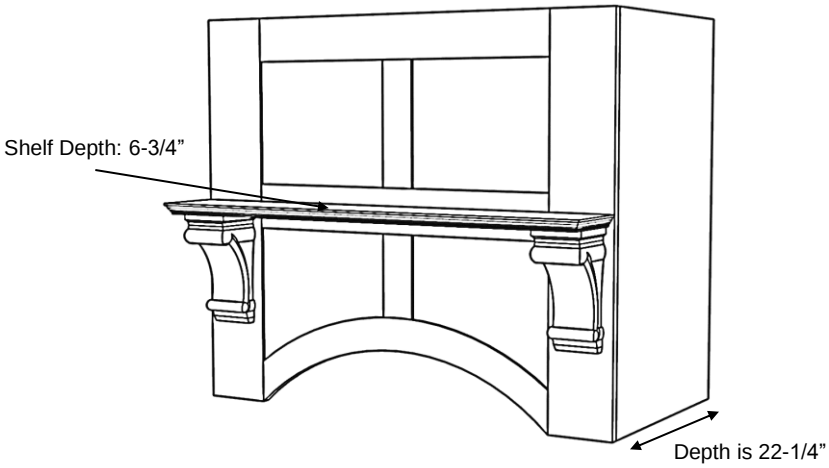

MS Series shown with optional corbels (MS)

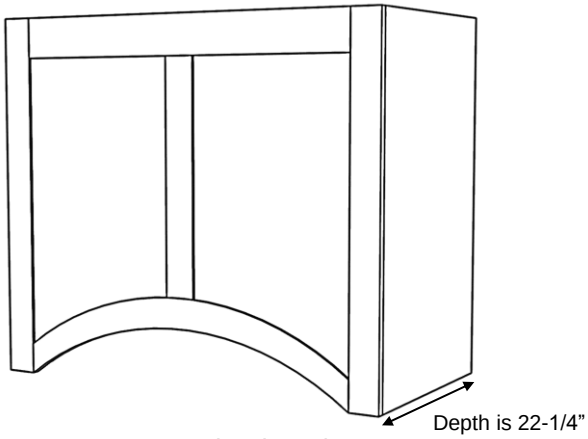

MDP Series (MDP)

M Series

Standard Widths	30, 36, 42, 48, 54, 60 (Reduced widths available) *Minimum Width 30”
Standard Heights	24, 30, 36, 42, 48 (Reduced heights available)
Removable Options	Removable Panel – Standard on MS style only (MRP) 2” fixed top rail available by request (MRP-2TR) –See modifications section.
Available Options	Decorative shelf is the default shelf style Basic shelf style is available upon request Corbels – All Stanisci corbel options will fit this design (See corbel options page)
Ventilation	Hood will be same width as available vent width. Example: To use a 36” vent model, the hood should be a minimum of 36” wide
Grain Direction	Vertical

700 South Glaspie Street • Oxford, MI 48371 • (248) 572-6880 • email: sales@wood-hood.com • www.wood-hood.com

Copyright Stanisci Design 2026 rights reserved

Madison – M Series

In-Series

Standard Heights: 24, 30, 36, 42, 48

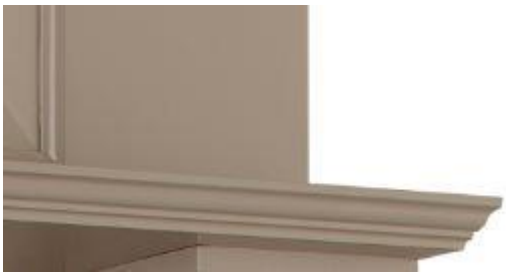

Decorative Shelf- Standard

Basic Shelf- Optional

M- 4 Panels Without Shelf

M 30
M 36
M 42
M 48
M 54
M 60

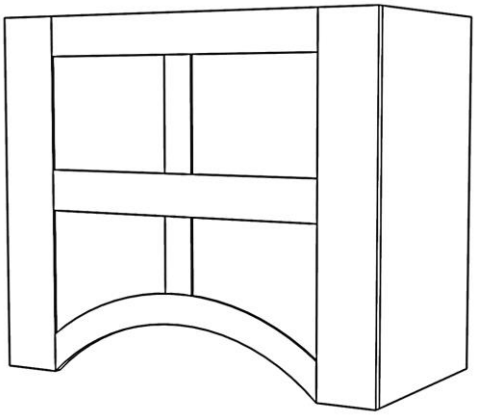

MS- 4 Panels With Shelf

MS 30
MS 36
MS 42
MS 48
MS 54
MS 60

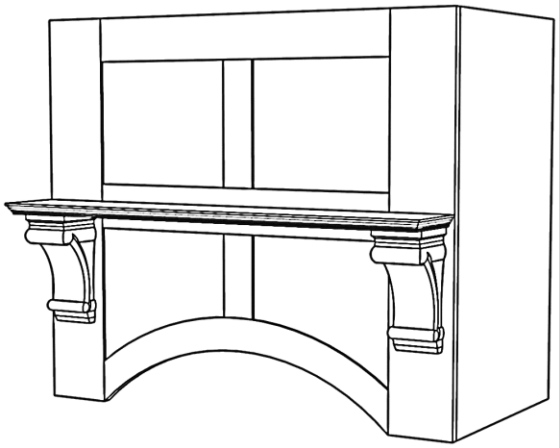

MDP- Two Panels

MDP 30
MDP 36
MDP 42
MDP 48
MDP 54
MDP 60

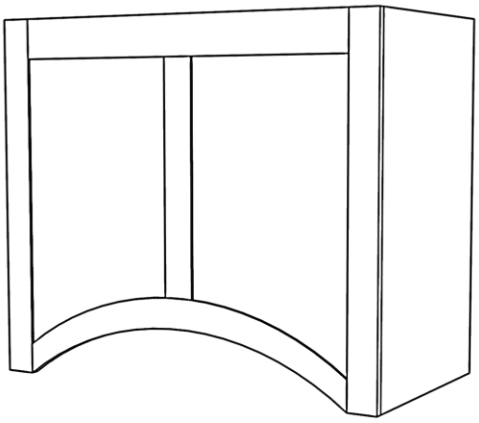

700 South Glaspie Street • Oxford, MI 48371 • (248) 572-6880 • email: sales@wood-hood.com • www.wood-hood.com

Copyright Stanisci Design 2026 rights reserved

Naples - N Series

In-Series

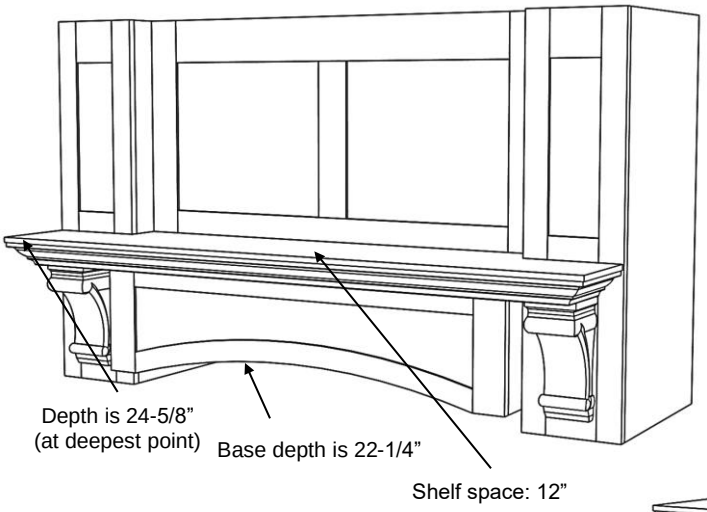

N Series shown with DP2 Base (NDP2),
#1 Classic molding and optional corbels
(48" – 60" wide will have 2 center panels)

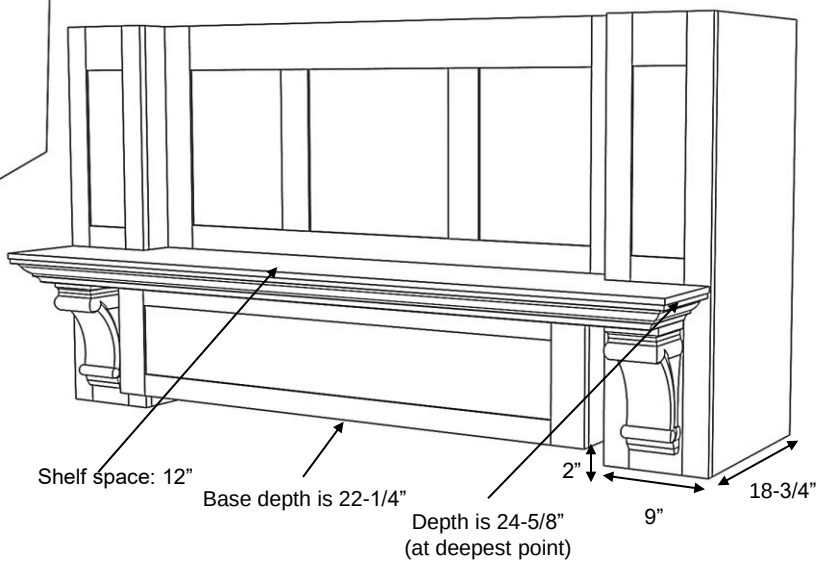

N Series shown with RSS Base (NRSS),
#1 Classic molding and optional corbels
(66" – 78" wide will have 3 center panels)

N Series

Standard Widths	48, 54, 60, 66, 72, 78 (Reduced widths available) To calculate minimum width, take range width plus 18". Example: A 36" range would get a 54" wide hood. (36 + 18 = 54)
Standard Heights	26, 32, 38, 44, 50 (Reduced heights available) To calculate height, take ceiling height minus 64". Example: A 96" ceiling would have a 32" tall hood. (96 - 64 = 32)
Removable Options	Removable Panel is standard (MRP) 2" fixed top rail available by request (MRP-2TR) – see modifications section.
Ventilation	Hood must be a minimum of 18" wider than available vent width. Example: To use a 36" vent model, the hood should be a minimum of 54" wide
Available Moldings	#1 Classic, #2 Simple
Available Options	Corbels - All Stanisci corbel options will fit this design (See corbel options page)
Grain Direction	Vertical (Base is horizontal)

700 South Glaspie Street • Oxford, MI 48371 • (248) 572-6880 • email: sales@wood-hood.com • www.wood-hood.com

Copyright Stanisci Design2026 rights reserved

Naples – N Series

In-Series

Standard Heights: 26, 32, 38, 44, 50

N- RS Base

NRS 48
NRS 54
NRS 60
NRS 66*
NRS 72*
NRS 78*

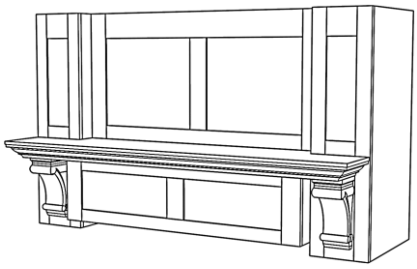

N- RSS Base

NRSS 48
NRSS 54
NRSS 60
NRSS 66*
NRSS 72*
NRSS 78*

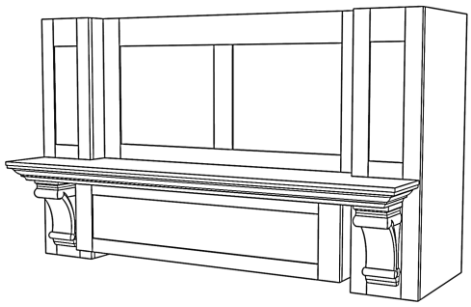

N- RA Base

NRA 48
NRA 54
NRA 60
NRA 66*
NRA 72*
NRA 78*

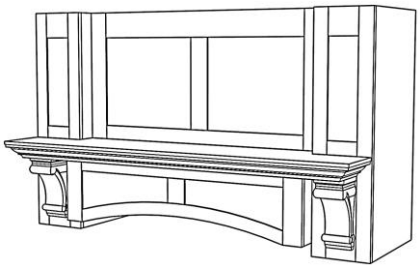

N- DP2 Base

NDP2 48
NDP2 54
NDP2 60
NDP2 66*
NDP2 72*
NDP2 78*

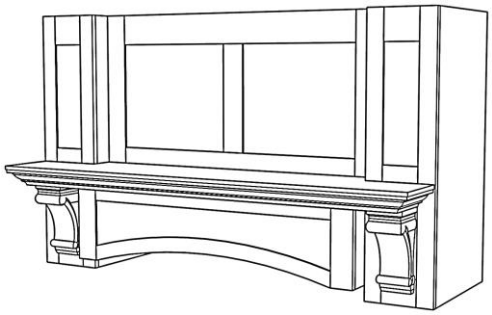

N- SL Base

NSL 48
NSL 54
NSL 60
NSL 66*
NSL 72*
NSL 78*

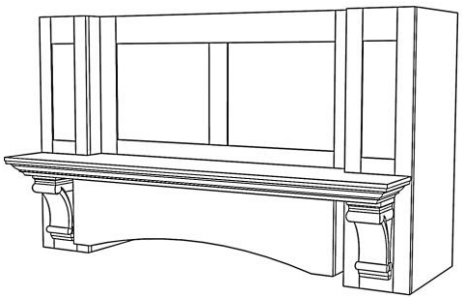

N- DP1 Base

NDP1 48
NDP1 54
NDP1 60
NDP1 66*
NDP1 72*
NDP1 78*

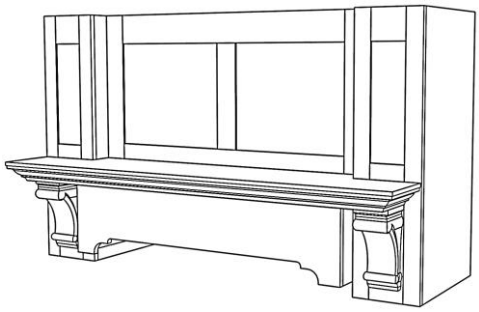

*Top center panel is three panels rather than two, due to width of hood.

700 South Glaspie Street • Oxford, MI 48371 • (248) 572-6880 • email: sales@wood-hood.com • www.wood-hood.com

Copyright Stanisci Design 2026 rights reserved

Plymouth – P Series

In-Series

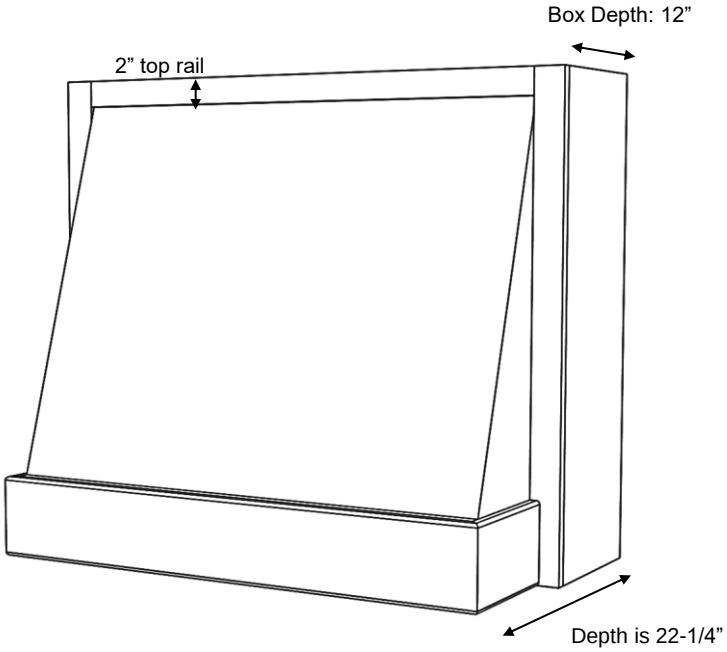

P Series shown with Hardwood Base (PHW)

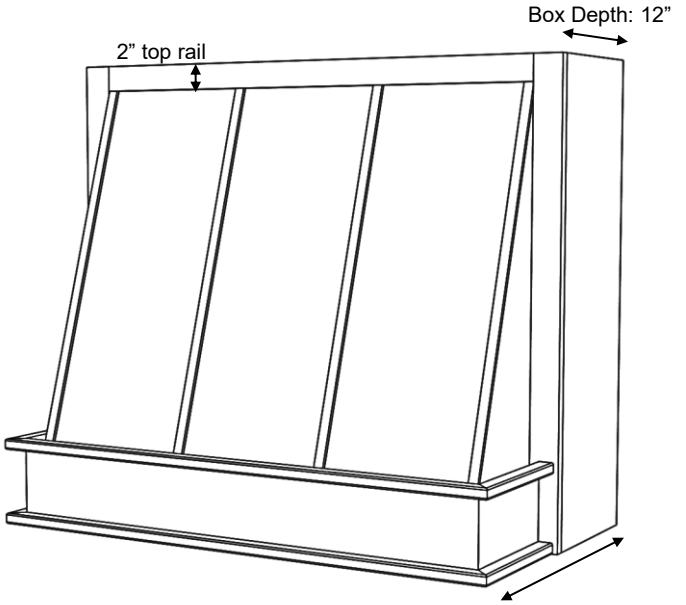

P Series shown with PL Base (PPL) and optional Hardwood Battens

P Series

Standard Widths	33,36,39,42,45,48,51,54,57,60,63 (Reduced widths available)
Standard Heights	24, 30, 36, 42, 48 (Reduced heights available)
Removable Options	Removable Front (RF) – Rear Box Depth will be 16” – see modifications section. Applied Removable Panel (ARP) – see modifications section.
Ventilation	Hood must be a minimum of 3” wider than available vent width. Example: To use a 36” vent model, the hood should be a minimum of 39” wide
Available Moldings	#3 Basic is standard
Available Options	Hardwood Battens (See battens options page) 12” Box Depth can be modified by request
Grain Direction	Vertical (Base is horizontal) Hoods over 48” wide will have horizontal grain on angled front.

700 South Glaspie Street • Oxford, MI 48371 • (248) 572-6880 • email: sales@wood-hood.com • www.wood-hood.com

Copyright 2026 Stanisci Design all rights reserved

Plymouth - P Series

In-Series

Standard Heights: 24, 30, 36, 42, 48

P- PL Base

PPL 33
PPL 36
PPL 39
PPL 42
PPL 45
PPL 48
PPL 51*
PPL 54*
PPL 57*
PPL 60*
PPL 63*

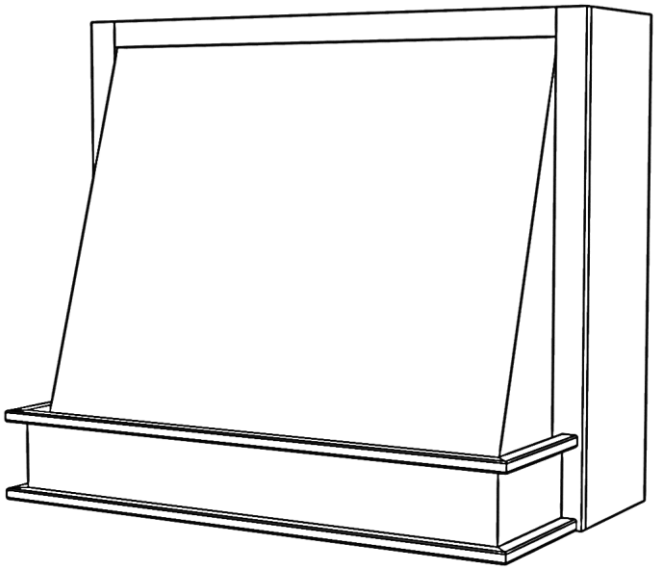

P- Hardwood Base

PHW 33
PHW 36
PHW 39
PHW 42
PHW 45
PHW 48
PHW 51*
PHW 54*
PHW 57*
PHW 60*
PHW 63*

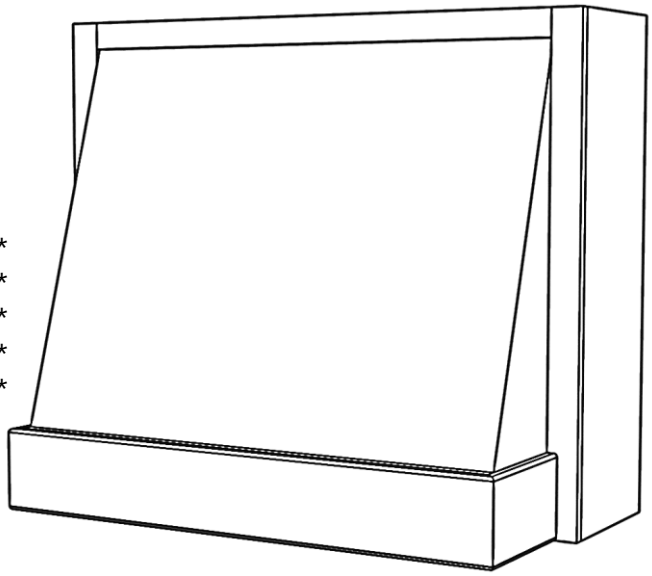

** Hoods over 48" wide will have horizontal grain on angled front.*

700 South Glaspie Street • Oxford, MI 48371 • (248) 572-6880 • email: sales@wood-hood.com • www.wood-hood.com

Copyright 2026 Stanisci Design all rights reserved

Quebec - Q Series

In-Series

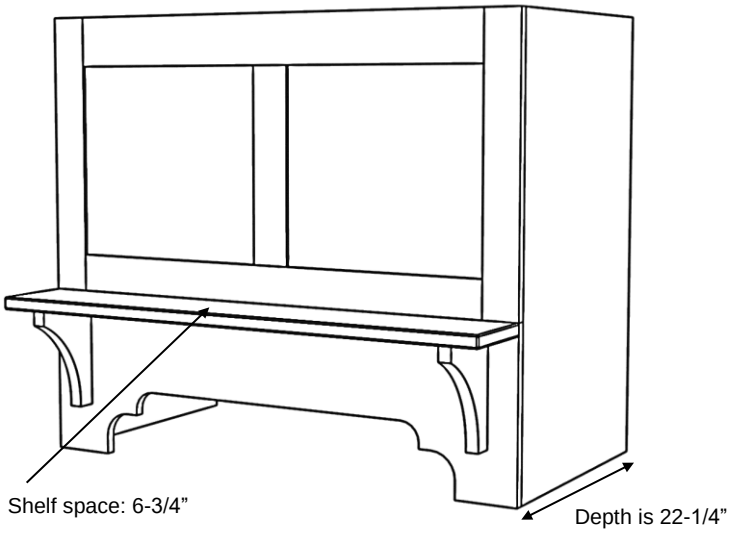

Q Series with Bracket Corbels (QBKT)

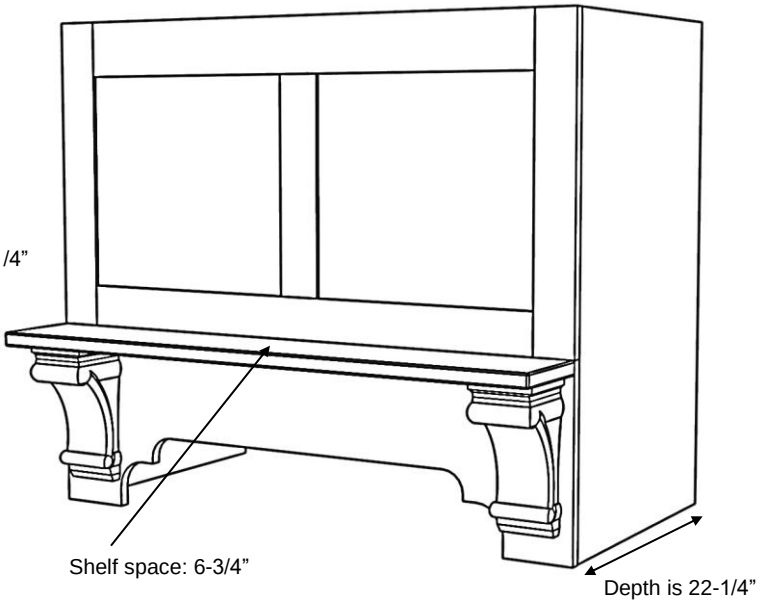

Q Series (QS)
shown with optional corbels.

Q Series

Standard Widths	30, 36, 42, 48, 54, 60 (Reduced widths available) *Minimum Width 30”
Standard Heights	24, 30, 36, 42, 48 (Reduced heights available)
Removable Options	Removable Panel is standard (MRP) 2” fixed top rail available by request (MRP-2TR) – see modifications section.
Ventilator	Hood will be same width as available vent width. Example: To use a 36” vent model, the hood should be a minimum of 36” wide.
Available Options	Basic shelf is the default shelf style Decorative shelf style is available upon request Corbels – All Stanisci corbel options will fit this design (See corbel options page)
Grain Direction	Vertical (Base is horizontal)

700 South Glaspie Street • Oxford, MI 48371 • (248) 572-6880 • email: sales@wood-hood.com • www.wood-hood.com

Copyright Stanisci Design 2026 rights reserved

Quebec – Q Series

In-Series

Standard Heights: 24, 30, 36, 42, 48

Basic Shelf- Standard

Decorative Shelf- Optional

QBKT- With Shelf and Simple Brackets

QBKT 30
QBKT 36
QBKT 42
QBKT 48
QBKT 54
QBKT 60

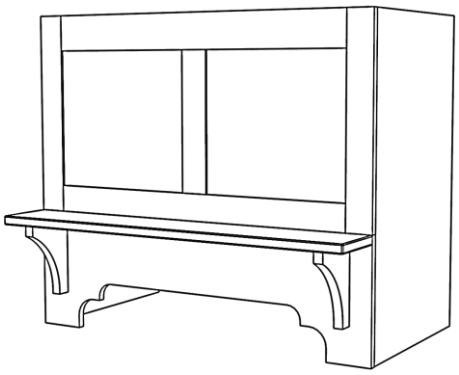

QS- With Shelf

QS 30
QS 36
QS 42
QS 48
QS 54
QS 60

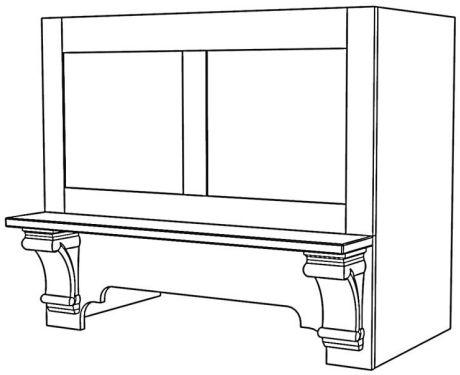

Copyright Stanisci Design 2026 rights reserved

Saddlebrook - SB100 Series

In-Series

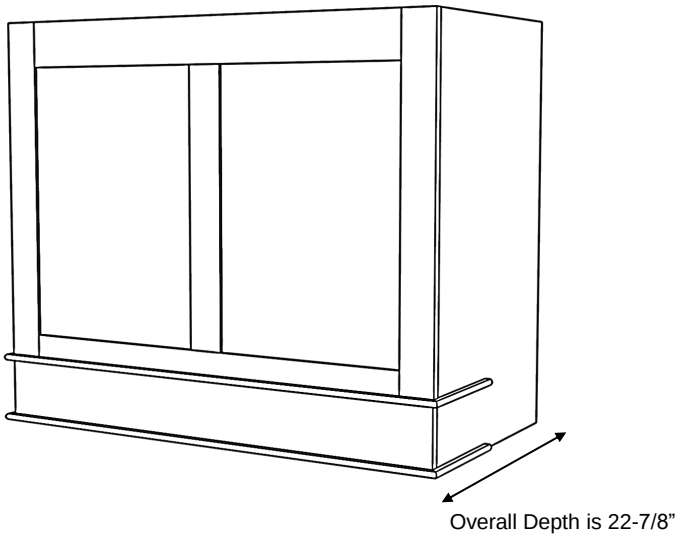

SB100 Series hood (SB100)
(30” – 42” wide will have 2 center panels)

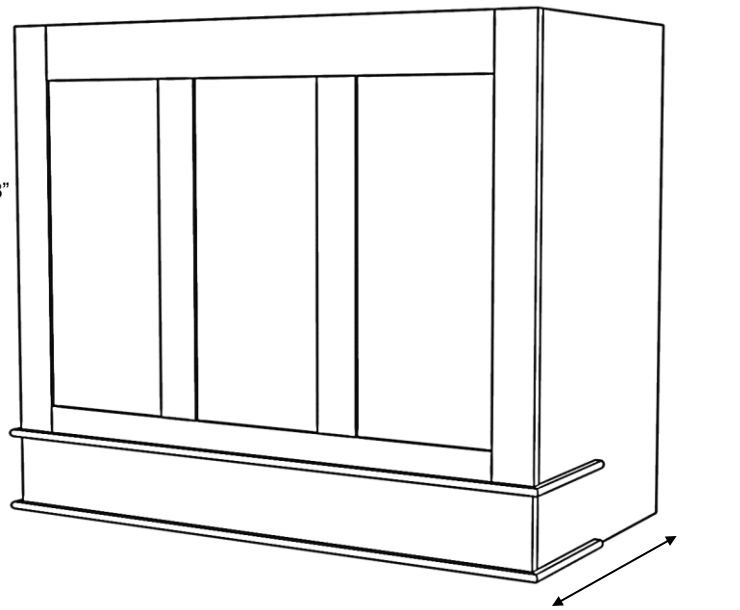

SB100 Series hood (SB100)
(48” – 60” wide will have 3 center panels)

SB100 Series

Standard Widths	30, 36, 42, 48, 54, 60 (Reduced widths available) *Minimum Width 30”
Standard Heights	24, 30, 36, 42, 48 (Reduced heights available)
Removable Options	Removable Panel – standard (MRP) 2” fixed top rail available by request (MRP-2TR) – see modifications section.
Standard Assumptions	Moldings will be shipped loose, cut and sized to full depth of hood, and field trimmed to size.
Ventilation	Hood will be same width as available vent width. Example: To use a 36” vent model, the hood should be a minimum of 36” wide.
Grain Direction	Vertical (Base is horizontal)

700 South Glaspie Street • Oxford, MI 48371 • (248) 572-6880 • email: sales@wood-hood.com • www.wood-hood.com

Copyright Stanisci Design 2026 rights reserved

Saddlebrook - SB100 Series

In-Series

Standard Heights: 24, 30, 36, 42, 48

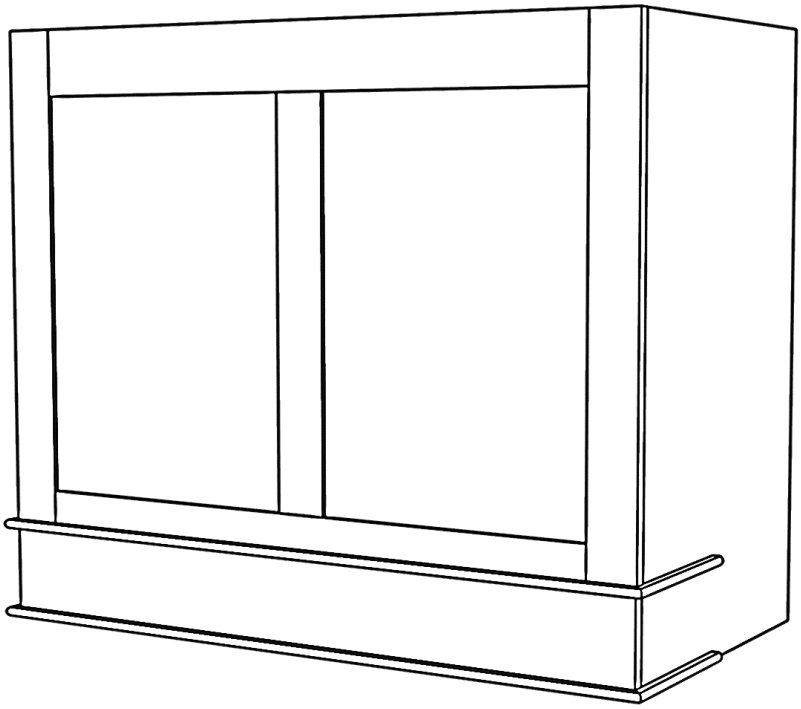

SB100 – Standard Hood

SB100 30
SB100 36
SB100 42
SB100 48*
SB100 54*
SB100 60*

* There will be three panels rather than two, due to width of hood

700 South Glaspie Street • Oxford, MI 48371 • (248) 572-6880 • email: sales@wood-hood.com • www.wood-hood.com

Copyright Stanisci Design 2026 rights reserved

Springfield - S Series

In-Series

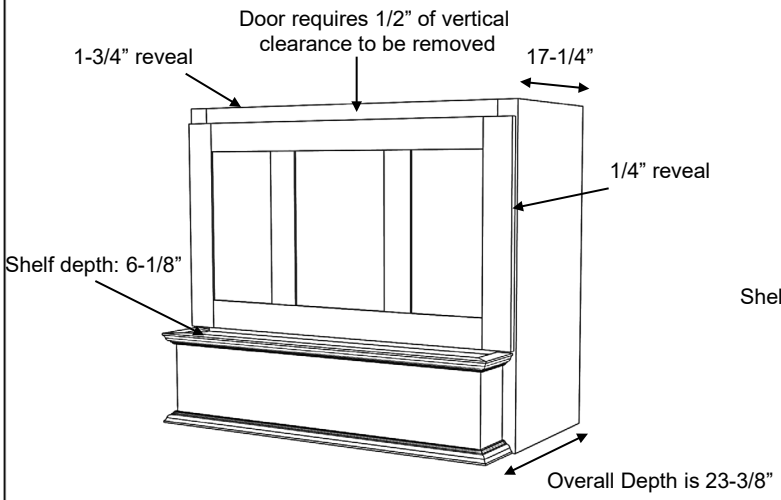

S Series shown with Standard Base (S) and #1 Classic moldings

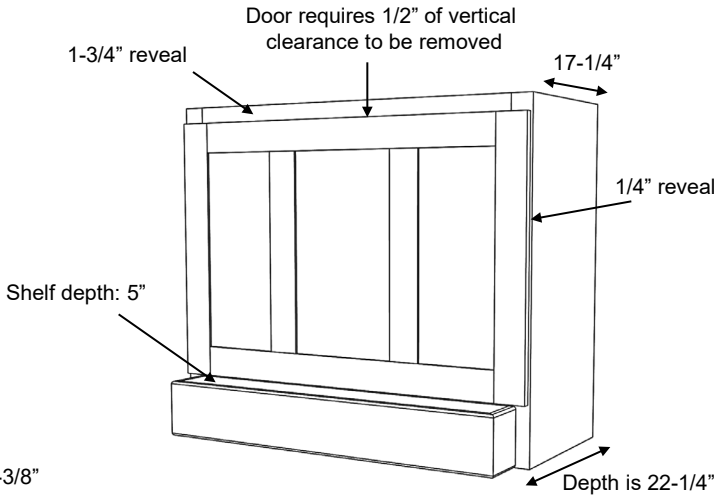

S Series shown with Hardwood Base (SHW)

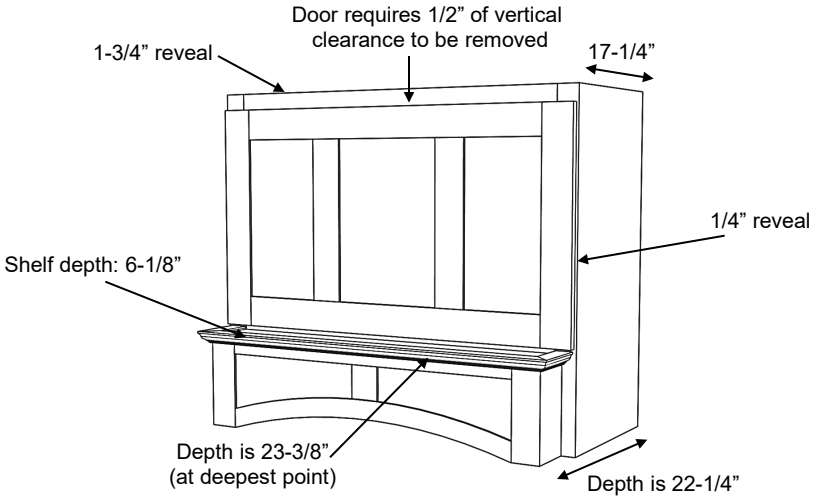

S Series shown with RA Base (SRA) and #1 Classic moldings

S Series

Standard Widths	33, 36, 39, 42, 45, 48, 51, 54, 57, 60, 63 (Reduced widths available)
Standard Heights	24, 30, 36, 42, 48 (Reduced heights available)
Removable Options	Removable Panel is standard Door removes by pulling upwards. Minimum 1/2" clearance is needed above top of door.
Ventilation	Hood must be a minimum of 3" wider than available vent width. Example: To use a 36" vent model, the hood should be a minimum of 39" wide.
Available Moldings	#1 Classic, #2 Simple, #3 Basic
Grain Direction	Vertical (Base is horizontal)

700 South Glaspie Street • Oxford, MI 48371 • (248) 572-6880 • email: sales@wood-hood.com • www.wood-hood.com

Copyright Stanisci Design 2026 rights reserved

Springfield - S Series

In-Series

Standard heights of 24, 30, 36, 42, 48

S- Standard Base

S 33
S 36
S 39
S 42
S 45
S 48
S 51
S 54
S 60
S 57
S 63

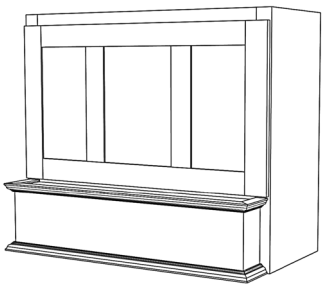

S- Hardwood Base

SHW 33
SHW 36
SHW 39
SHW 42
SHW 45
SHW 48
SHW 51
SHW 54
SHW 57
SHW 60
SHW 63

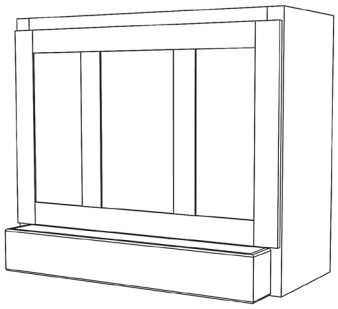

S- RS Base

SRS 33
SRS 36
SRS 39
SRS 42
SRS 45
SRS 48
SRS 51
SRS 54
SRS 57
SRS 60
SRS 63

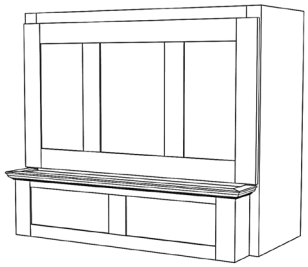

S- RSS Base

SRSS 33
SRSS 36
SRSS 39
SRSS 42
SRSS 45
SRSS 48
SRSS 51
SRSS 54
SRSS 57
SRSS 60
SRSS 63

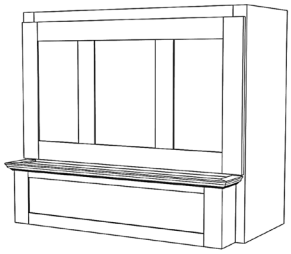

S- RA Base

SRA 33
SRA 36
SRA 39
SRA 42
SRA 45
SRA 48
SRA 51
SRA 54
SRA 57
SRA 60
SRA 63

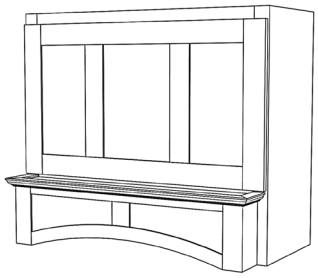

S- DP2 Base

SDP2 33
SDP2 36
SDP2 39
SDP2 42
SDP2 45
SDP2 48
SDP2 51
SDP2 54
SDP2 57
SDP2 60
SDP2 63

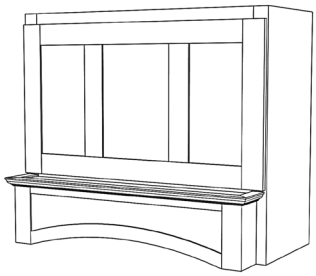

S- SL Base

SSL 33
SSL 36
SSL 39
SSL 42
SSL 45
SSL 48
SSL 51
SSL 54
SSL 57
SSL 60
SSL 63

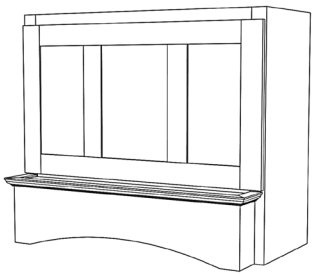

S- DP1 Base

SDP1 33
SDP1 36
SDP1 39
SDP1 42
SDP1 45
SDP1 48
SDP1 51
SDP1 54
SDP1 57
SDP1 60
SDP1 63

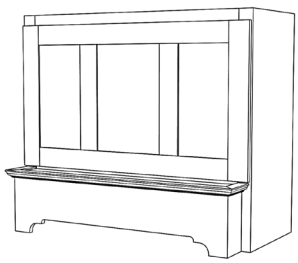

700 South Glaspie Street • Oxford, MI 48371 • (248) 572-6880 • email: sales@wood-hood.com • www.wood-hood.com

Copyright Stanisci Design 2026 rights reserved

Victoria - VX Series

Free Standing

NEW

Available September 2025

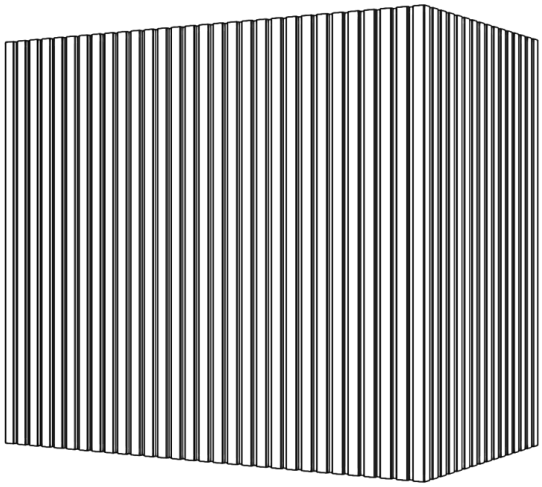

VX Series (VX)

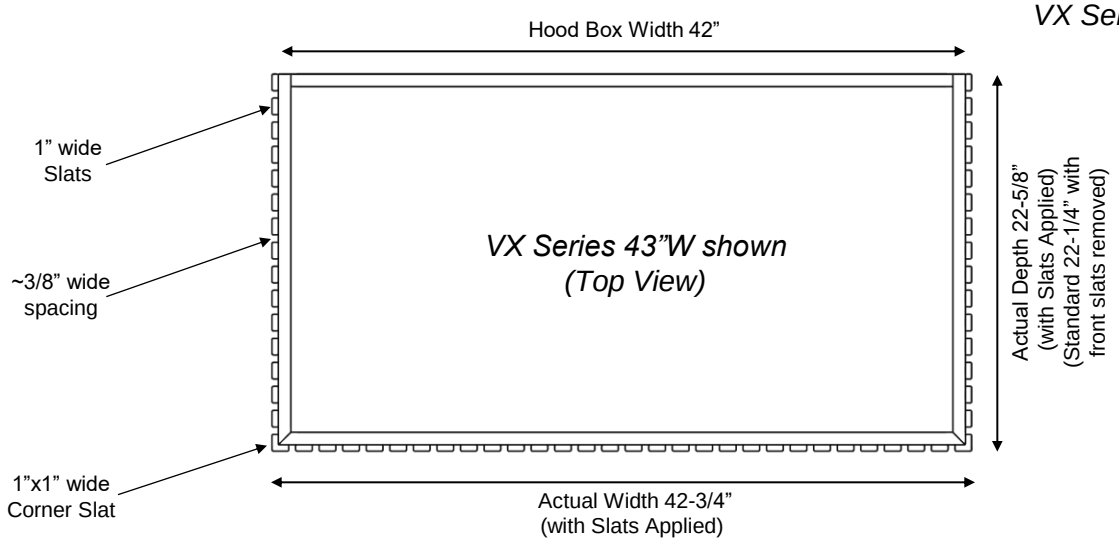

VX Series

Standard Widths *	31, 37, 43, 49, 55, 61 (Reduced widths available) *Minimum Width 31” *Please Note: The true width will be 1/4” less than width ordered. ***Example**: The finished width of a 37” wide hood will be 36-3/4”.*
Standard Heights	24, 30, 36, 42, 48 (Reduced heights available)
Removable Options	Not available
Standard Assumptions	Slats will be 1” wide x 3/8” thick Hardwood with a 1/16” radius on long edges Slat spacing is ~3/8”, varies slightly with hood width Average weight could exceed 100 pounds. Hood must be properly anchored to the wall
Ventilation	Hood must be a minimum of 1” wider than available vent width. Example: To use a 36” vent model, the hood should be a minimum of 37” wide
Grain Direction	Vertical

700 South Glaspie Street • Oxford, MI 48371 • (248) 572-6880 • email: sales@wood-hood.com • www.wood-hood.com

Copyright Stanisci Design 2026 rights reserved

Victoria - VX Series

Free Standing

Standard Heights: 24, 30, 36, 42, 48

VX – Standard Hood

VX 31

VX 37

VX 43

VX 49

VX 55

VX 61

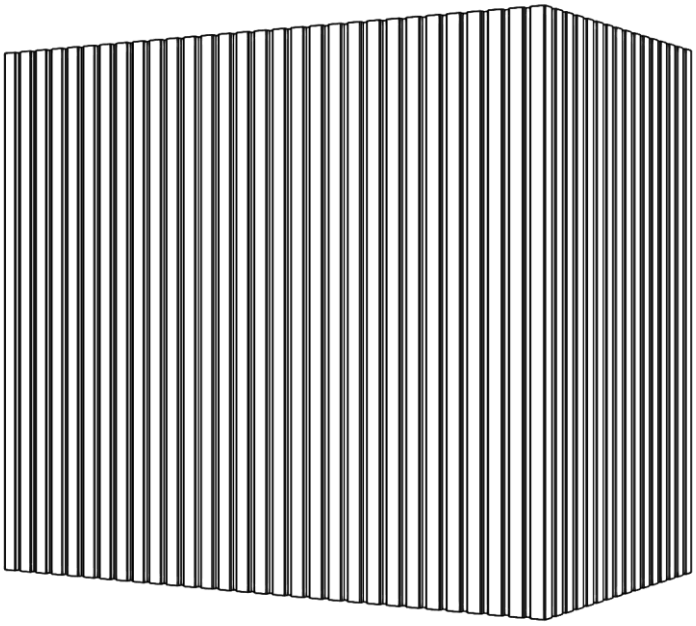

700 South Glaspie Street • Oxford, MI 48371 • (248) 572-6880 • email: sales@wood-hood.com • *www.wood-hood.com*

Copyright Stanisci Design 2026 rights reserved

Washington - W Series

In-Series

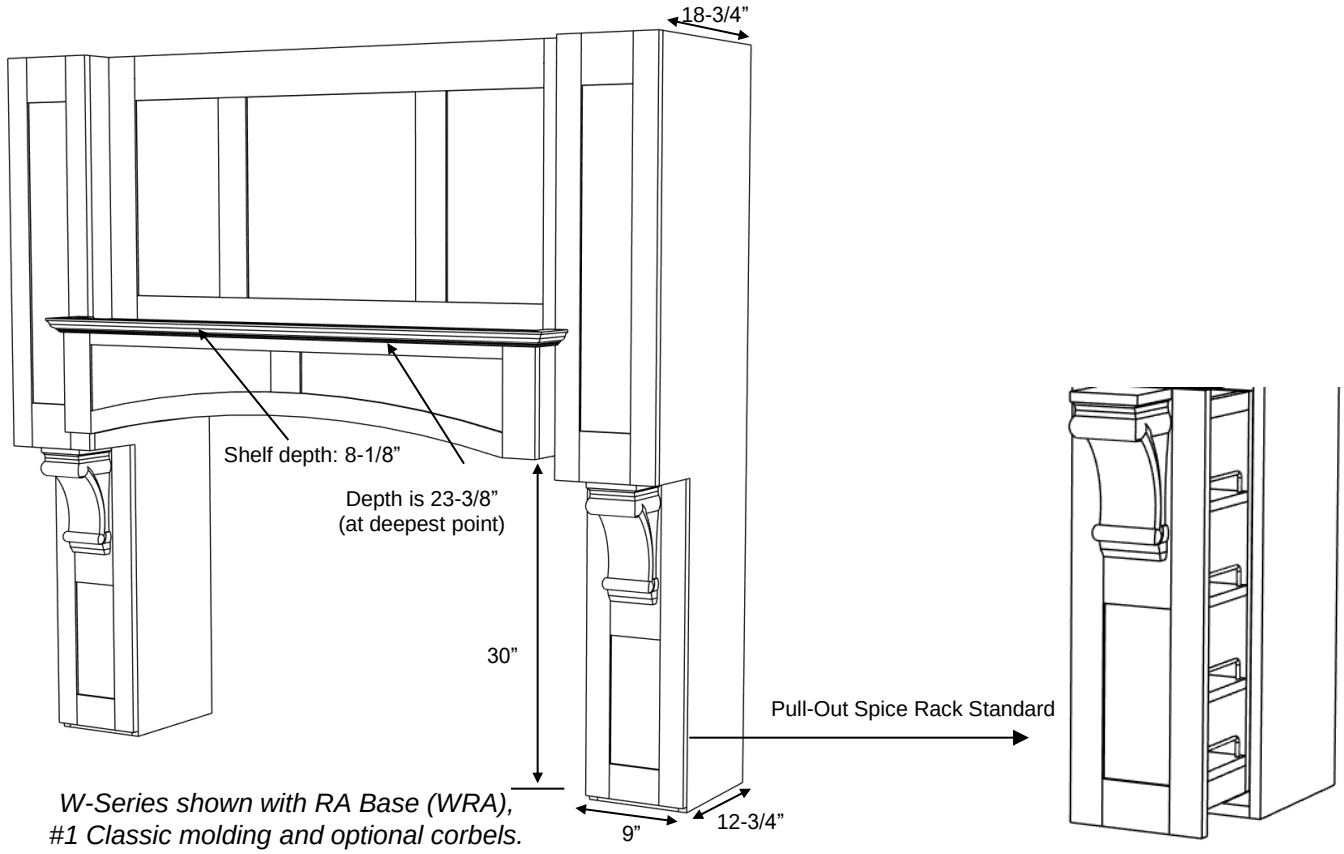

W-Series shown with RA Base (WRA), #1 Classic molding and optional corbels.

W Series

Standard Widths	66, 72, 78, 84, 90 (Reduced widths available) *Minimum Width 66” To calculate minimum width, take range width plus 36”. Example: A 36” range would get a 72” wide hood. (36 + 36 = 72) (Assumes 9” clearance between cook top and leg on both sides. Refer to your local building codes for minimum required clearance.)
Standard Heights	54, 60, 66, 72, 78, 84 (Reduced heights available) To calculate height, take ceiling height minus 36”. Example: A 96” ceiling would have a 60” tall hood. (96 - 36 = 60)
Removable Options	Removable Panel is standard (MRP) 2” fixed top rail available by request (MRP-2TR) – see modifications section.
Ventilation	Hood must be a minimum of 18” wider than available vent width. Example: To use a 54” vent model, the hood should be a minimum of 72” wide
Available Moldings	#1 Classic #2 Simple #3 Basic
Available Options	Pull out spice racks are standard – can be removed by request. Corbels - All Stanisci corbel options will fit this design (See corbel options page) Legs are set up for corbels, but full-size door can be requested if corbels are not being used.
Grain Direction	Vertical (Base is horizontal)

700 South Glaspie Street • Oxford, MI 48371 • (248) 572-6880 • email: sales@wood-hood.com • www.wood-hood.com

Copyright Stanisci Design 2026 rights reserved

Washington - W Series

In-Series

Standard Heights: 54, 60, 66, 72, 78, 84

W- Standard Base

W 66
W 72
W 78
W 84
W 90

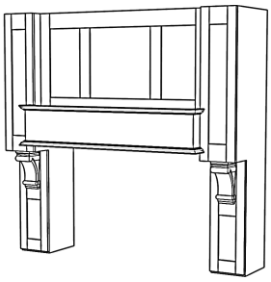

W- Hardwood Base

WHW 66
WHW 72
WHW 78
WHW 84
WHW 90

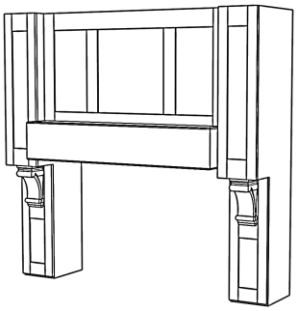

W- RS Base

WRS 66
WRS 72
WRS 78
WRS 84
WRS 90

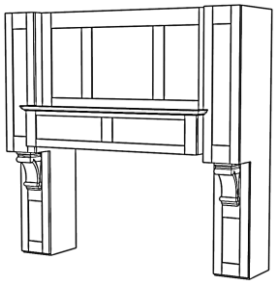

W- RSS Base

WRSS 66
WRSS 72
WRSS 78
WRSS 84
WRSS 90

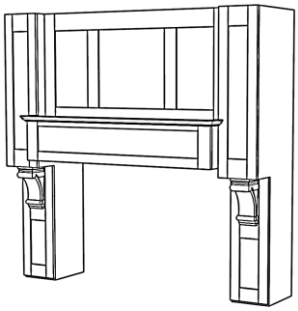

W- RA Base

WRA 66
WRA 72
WRA 78
WRA 84
WRA 90

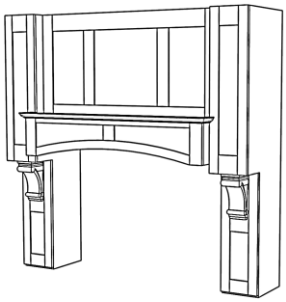

W- DP2 Base

WDP2 66
WDP2 72
WDP2 78
WDP2 84
WDP2 90

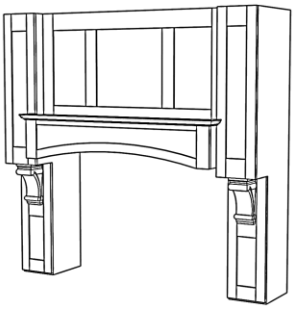

W- SL Base

WSL 66
WSL 72
WSL 78
WSL 84
WSL 90

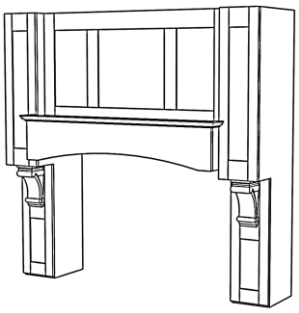

W- DP1 Base

WDP1 66
WDP1 72
WDP1 78
WDP1 84
WDP1 90

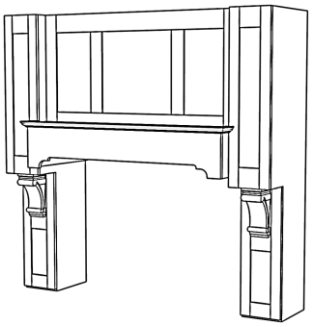

700 South Glaspie Street • Oxford, MI 48371 • (248) 572-6880 • email: sales@wood-hood.com • www.wood-hood.com

Copyright Stanisci Design 2026 rights reserved

Xavier - X Series

In-Series

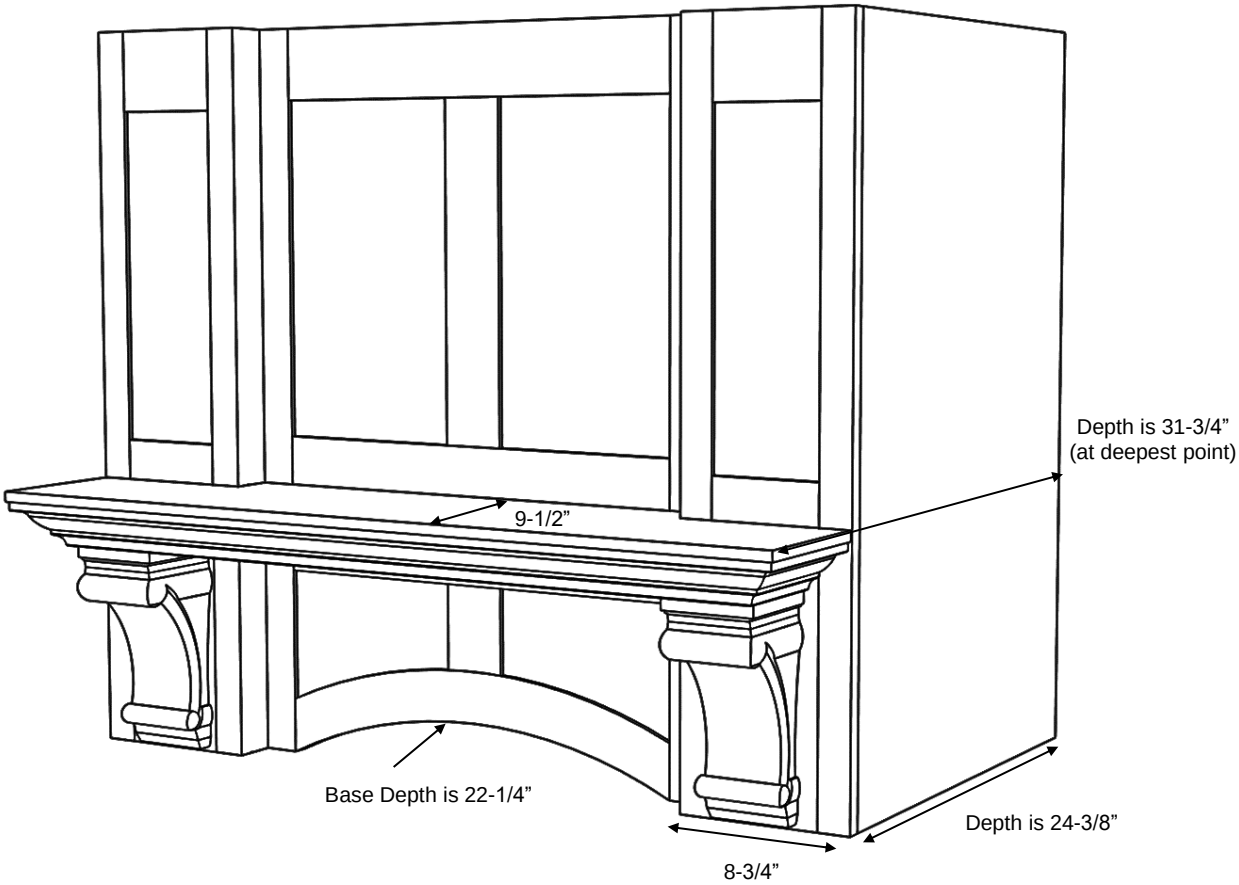

X-Series shown with RA Base (XRA),
#1 Classic Molding, and optional corbels

X Series

Standard Widths	30, 36, 42, 48, 54, 60 (Reduced widths available) *Minimum Width 30”
Standard Heights	24, 30, 36, 42, 48 (Reduced heights available)
Removable Options	Not available
Ventilation	Hood will be same width as available vent width. Example: To use a 36” vent model, the hood should be a minimum of 36” wide.
Available Moldings	#1 Classic, #2 Simple
Available option	Corbels - All Stanisci corbel options will fit this design (See corbel options page)
Grain Direction	Vertical

700 South Glaspie Street • Oxford, MI 48371 • (248) 572-6880 • email: sales@wood-hood.com • www.wood-hood.com

Copyright Stanisci Design 2026 rights reserved

Xavier - X Series

In-Series

Standard Heights: 24, 30, 36, 42, 48

X- RA Base

XRA 30*
XRA 36
XRA 42
XRA 48
XRA 54
XRA 60

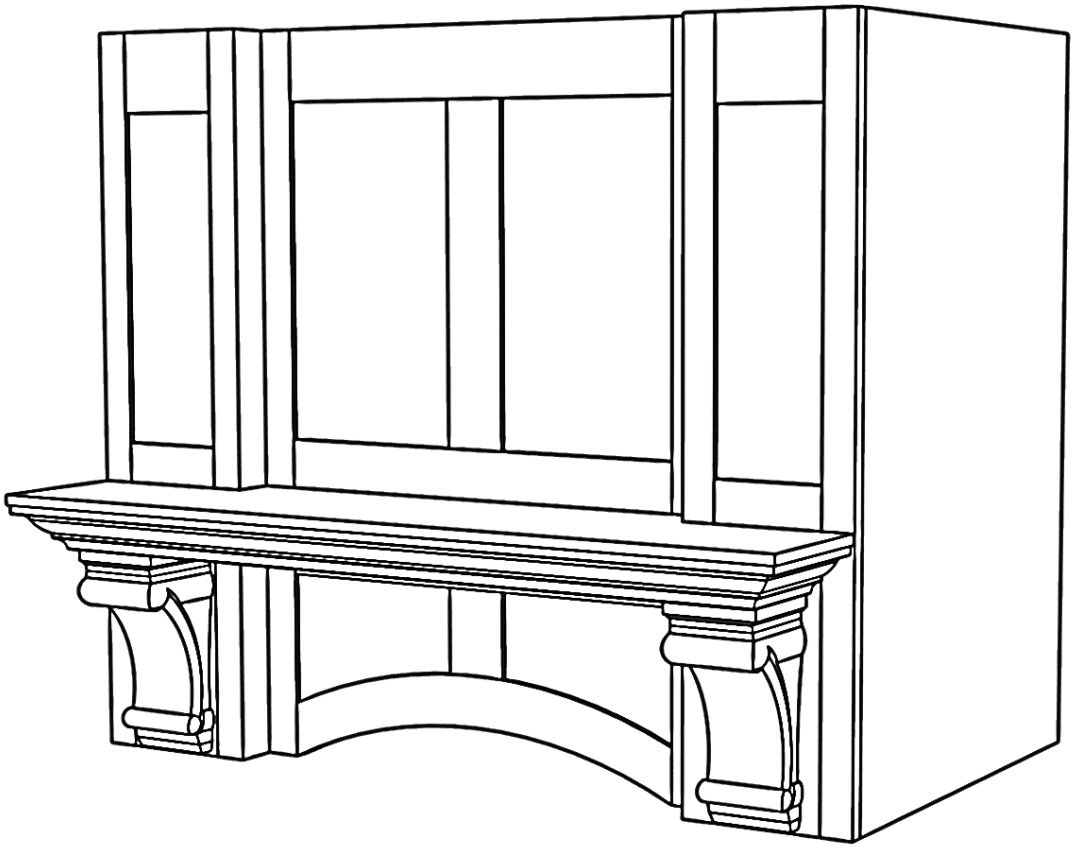

*Door Panels must be flat

700 South Glaspie Street • Oxford, MI 48371 • (248) 572-6880 • email: sales@wood-hood.com • www.wood-hood.com

Copyright Stanisci Design 2026 rights reserved

Zenith – Z200 Series

In-Series

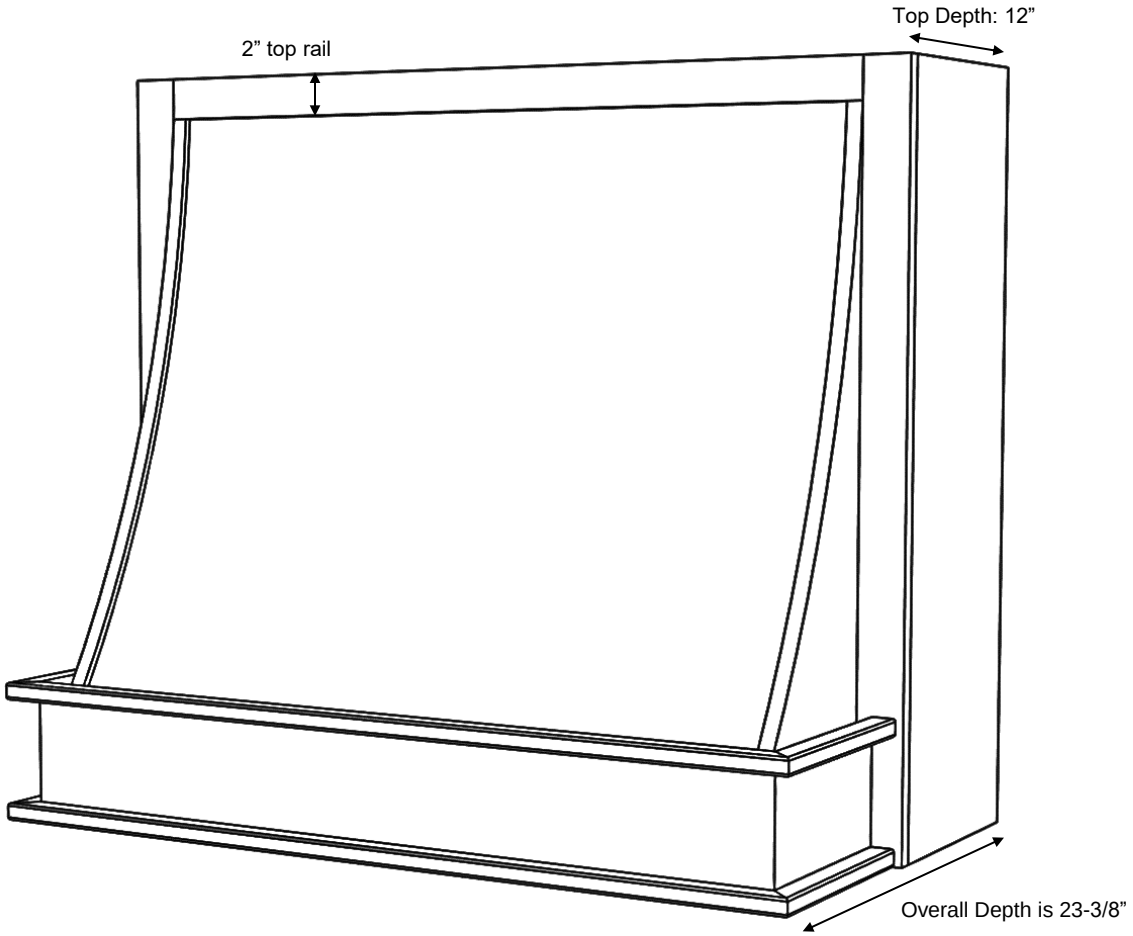

Z200 series shown with PL Base (Z200PL)

Z200 Series

Standard Widths	33,36,39,42,45,48,51,54,57,60,63 (Reduced widths available)
Standard Heights	30, 36, 42, 48 (Reduced heights available)
Removable Options	Removable Front (RF) – Rear Box must be 16” – see modifications section.
Ventilation	Hood must be a minimum of 3” wider than available vent width. Example: To use a 36” vent model, the hood should be a minimum of 39” wide.
Available Option	12” Box Depth can be modified by request.
Grain Direction	Vertical (Base is horizontal) Hoods over 48” wide will have horizontal grain on sloped front

700 South Glaspie Street • Oxford, MI 48371 • (248) 572-6880 • email: sales@wood-hood.com • www.wood-hood.com

Copyright Stanisci Design 2026 rights reserved

Standard Heights: 30, 36, 42, 48

Z200- PL Base

Z200PL 33
Z200PL 36
Z200PL 39
Z200PL 42
Z200PL 45
Z200PL 48
Z200PL 51*
Z200PL 54*
Z200PL 57*
Z200PL 60*
Z200PL 63*

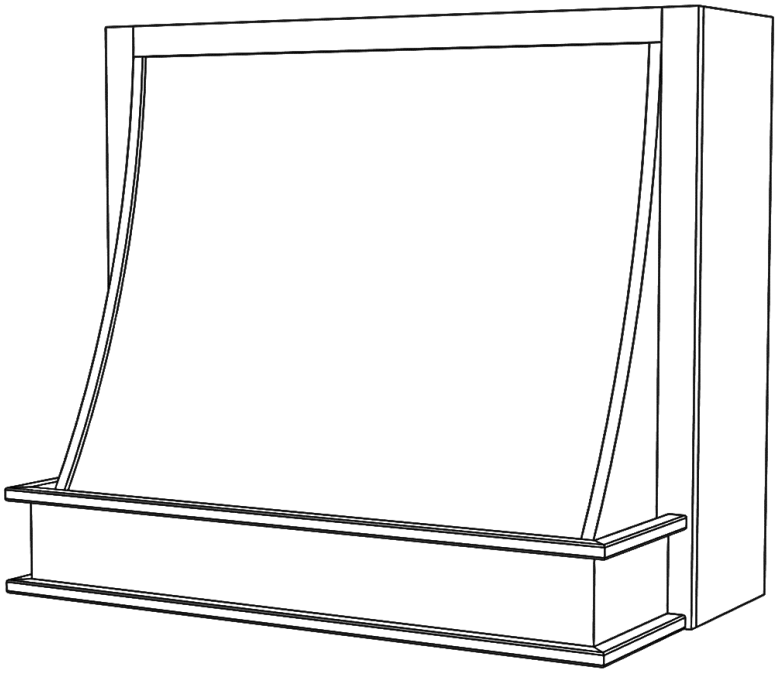

** Hoods over 48" wide will have horizontal grain on sloped front.*

700 South Glaspie Street • Oxford, MI 48371 • (248) 572-6880 • email: sales@wood-hood.com • www.wood-hood.com

Copyright 2026 Stanisci Design all rights reserved

Custom Hoods

Made to Order

All Stanisci Design Custom Range Hoods are built to order based on your specifications, and available in 12 different species! We offer a full line of ventilation engineered specifically for our range hoods, or we can modify our hoods to fit the homeowner's 3rd party vent unit. If you're interested in a design not shown in our catalog, send us a drawing / sketch/ picture to sales@wood-hood.com and someone from our Customs Department will be in touch!

Check us out on social media and www.wood-hood.com for even more design inspiration!

@woodrangehoods *@WoodRangeHoods* *@Stanisci Design & Manufacturing*

Custom S-Series Design created for Revive Home Studio in Marco Island, FL

700 South Glaspie Street • Oxford, MI 48371 • (248) 572-6880 • email: sales@wood-hood.com • www.wood-hood.com

Copyright Stanisci Design 2026 rights reserved

This page left intentionally blank

Copyright 2026 Stanisci Design all rights reserved

STANISCI DESIGN

Stainless Base w/ Baffle Filters

Now available in 17 finishes

SS-BASE VENTILATION

C Series shown with Gold Stainless Base (CGS)

BX Series shown with Stainless Steel Base (BXSS)

Underside view – Baffle filters will always be stainless steel regardless of selected finish

Stainless Base w/ Baffle Filters

Metal Baffle Bases can be ordered in place of the 6” high Hardwood Base on many of our range hood designs, and also serve as the hoods ventilation system. These Metal Baffle Bases consist of a 6” metal bottom and a fully integrated baffle liner on the underside complete with LED lights, stainless steel baffle filters, and control knobs.

Available Widths	30, 36, 42, 48, 54, 60 (custom widths are not available)
Motor Options	600/300 CFM, 1200 CFM
Available Hood Models	B, BXD, BX, BXV, C, CX, D, E, E200, ER200, ER600, FX200, G, and GT
Standard Finishes *(in stock)*	Stainless Steel (SS)

PRICE LEVEL 1 (*SPECIAL ORDER 6-8 WEEK LEAD TIME)*

Gold Stainless (GS)	Stainless w/ Matte clear (SMC)	Dark stainless (DSB)	Powder Coat: Aged Bronze (PC-AB)

Powder Coat: Speckled Pewter (PC-SP)	Powder Coat: Wilson Blue (PC-WB)	Powder Coat: Gardenia (PC-GA)
Powder Coat: Traffic White (PC-TW)	Powder Coat: Jet Black (PC-JB)	Powder Coat: Flat Black Matte (PC-BM)

PRICE LEVEL 2 *(SPECIAL ORDER 6-8 WEEK LEAD TIME)*

Brushed Brass Coated (BBC)	Brushed Brass **will patina* (BB)	Smoked Brass (SB)
Brushed Copper **will patina* (BC)	Brushed Copper Coated (BCC)	Smoked Copper (SC)

700 South Glaspie Street • Oxford, MI 48371 • (248) 572-6880 • email: sales@wood-hood.com • www.wood-hood.com

Copyright Stanisci Design 2026 rights reserved

STANISCI DESIGN

Stainless Base w/ Baffle Filters

Now available in 17 finishes

SS-BASE VENTILATION

STANDARD FINISH (Stocked at Factory)

Stainless Steel - SS

SPECIAL ORDER FINISHES (6-8 week lead-time)

PRICE LEVEL 1

Gold Stainless
GS

SS w/ Matte Clear
SMC

Dark Stainless
DSB

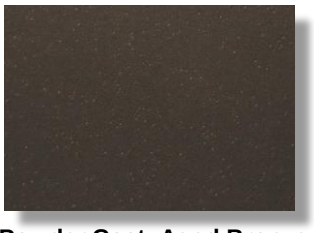

Powder Coat: Aged Bronze
PC-AB

Powder Coat: Speckled Pewter
PC-SP

Powder Coat: Wilson Blue
PC-WB

Powder Coat: Gardenia
PC-GA

Powder Coat: Traffic White
PC-TW

Powder Coat: Jet Black
PC-JB

Powder Coat: Flat Black Matte
PC-BM

PRICE LEVEL 2

Brushed Brass Coated
BBC

Brushed Brass **will patina*
BB

Smoked Brass
SB

Brushed Copper **will patina*
BC

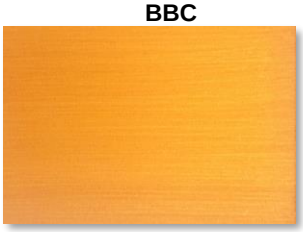

Brushed Copper Coated
BCC

Smoked Copper
SC

700 South Glaspie Street • Oxford, MI 48371 • (248) 572-6880 • email: sales@wood-hood.com • www.wood-hood.com

Copyright 2026 Stanisci Design all rights reserved

STANISCI DESIGN

Stainless Base w/ Baffle Filters

SS-BASE VENTILATION

SS Base w/ Baffle Filters

Technical Features:

- 6” high metal base available in 17 finishes
- Fully integrated baffle liner on the underside of metal base
- Dimmer controlled LED lighting
- Variable speed fan control
- Large dishwasher safe brushed stainless steel baffle filters
- Several blower combinations available
- Liner sizes available from 30” – 60”

Stanisci Design ventilation has been engineered specifically for Stanisci Design Range Hoods, and are in-stock and ready to ship!

Features your customers want:

- Dishwasher safe filters
- Easy cleaning
- Dimmer controlled LED lighting
- European design
- Three year in home warranty
- Quiet, variable speed blower- made in Germany

MADE IN U. S. A.

700 South Glaspie Street • Oxford, MI 48371 • (248) 572-6880 • email: sales@wood-hood.com • www.wood-hood.com

Copyright 2026 Stanisci Design all rights reserved

Stainless Base w/ Baffle Filters

SS-BASE VENTILATION

SM600/300 SS-BASE-600/300-XX	600 CFM motor *comes with optional wire harness to reduce max CFM to 300
DUCTING	8” ROUND
AMPS	110V - 15 amp dedicated circuit
SS-BASE-600/300-30: 30 W x 22-1/4 D SS-BASE-600/300-36: 36 W x 22-1/4 D SS-BASE-600/300-42: 42 W x 22-1/4 D SS-BASE-600/300-48: 48 W x 22-1/4 D SS-BASE-600/300-54: 54 W x 22-1/4 D SS-BASE-600/300-60: 60 W x 22-1/4 D	

SM1200 SS-BASE-1200-XX	1200 CFM motor
DUCTING	10” ROUND
AMPS	110V - 15 amp dedicated circuit
NOT AVAILABLE IN 30” WIDE SS-BASE-1200-36: 36 W x 22-1/4 D SS-BASE-1200-42: 42 W x 22-1/4 D SS-BASE-1200-48: 48 W x 22-1/4 D SS-BASE-1200-54: 54 W x 22-1/4 D SS-BASE-1200-60: 60 W x 22-1/4 D	

30-42” liners have 2 LED bulbs
48” liners have 3 LED bulbs
54-60” liners have 4 LED bulbs.
LED BULBS – 50W equivalent

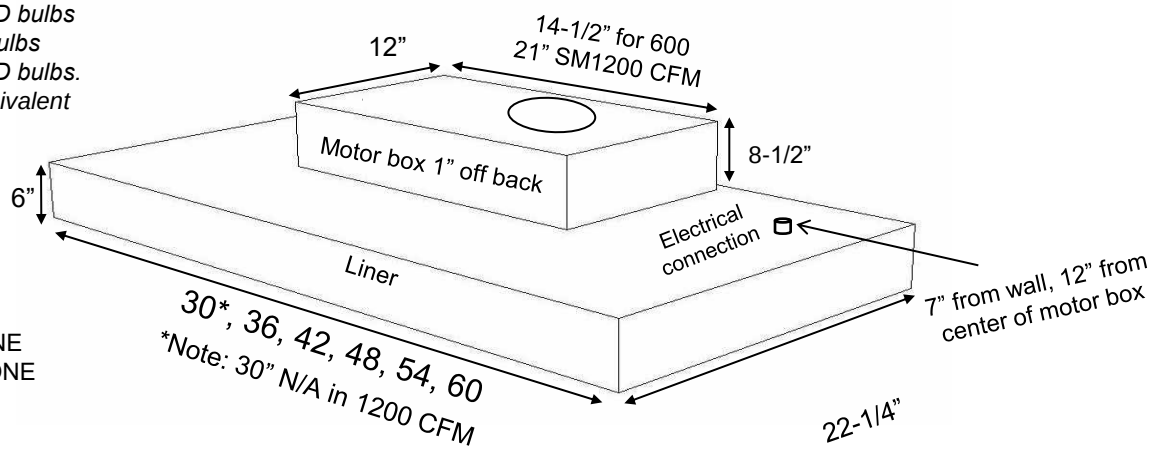

600 is rated at 5.5 SONE
1200 is rated at 5.9 SONE

Vent Width / Model

WOOD HOOD MODEL & SIZE	SS-BASE-30	SS-BASE-36	SS-BASE-42	SS-BASE-48	SS-BASE-54	SS-BASE-60
C,CX, E200, ER200, ER600, FX200	30	36	42	48	54	60
B, D, E, G, GT	N/A	36	42	48	54	60
BXD, BX, BXV	30	36	42	48	54	60

700 South Glaspie Street • Oxford, MI 48371 • (248) 572-6880 • email: sales@wood-hood.com • www.wood-hood.com

Copyright Stanisci Design 2026 rights reserved

STANISCI DESIGN

PML Ventilation

Professional Mesh Liners (PML)

Professional Mesh Liners

Technical Features:

- Dimmer LED lighting
- Variable speed fan control
- Large dishwasher safe stainless steel mesh insert filters
- Several blower combinations available
- Liner sizes available from 30” – 60”
- Made exclusively for Stanisci Design by Modern-Aire Ventilation

Charcoal filters available for recirculating applications (air must be directed out of hood to maintain warranties).

Stanisci Design ventilation has been engineered specifically for Stanisci Design Range Hoods, and are in-stock and ready to ship!

Features your customers want:

- Dishwasher safe filters
- Dimmer controlled LED lighting
- European design
- Three year in home warranty
- Quiet, variable speed blower- made in Germany

MADE IN U. S. A.

700 South Glaspie Street • Oxford, MI 48371 • (248) 572-6880 • email: sales@wood-hood.com • www.wood-hood.com

Copyright 2026 Stanisci Design all rights reserved

PML Ventilation

Professional Mesh Liners (PML)

SM600/300 PML-600/300-XX	600 CFM motor *comes with optional wire harness to reduce max CFM to 300
DUCTING	8” ROUND
AMPS	110V - 15 amp dedicated circuit
PML-600/300-30: 28-3/8 W x 20-5/8 D PML-600/300-36: 34-3/8 W x 20-5/8 D PML-600/300-42: 40-3/8 W x 20-5/8 D PML-600/300-48: 46-3/8 W x 20-5/8 D PML-600/300-54: 52-3/8 W x 20-5/8 D PML-600/300-60: 58-3/8 W x 20-5/8 D	

SM1200 PML-1200-XX	1200 CFM motor
DUCTING	10” ROUND
AMPS	110V - 15 amp dedicated circuit
NOT AVAILABLE IN 30” WIDE PML-1200-36: 34-3/8 W x 20-5/8 D PML-1200-42: 40-3/8 W x 20-5/8 D PML-1200-48: 46-3/8 W x 20-5/8 D PML-1200-54: 52-3/8 W x 20-5/8 D PML-1200-60: 58-3/8 W x 20-5/8 D	

*For Island Liners, motor box and duct will be centered
1200 CFM N/A on 36”W Island Liner

30-42” liners have 2 LED bulbs
48” liners have 3 LED bulbs
54-60” liners have 4 LED bulbs.
LED BULBS – 50W equivalent

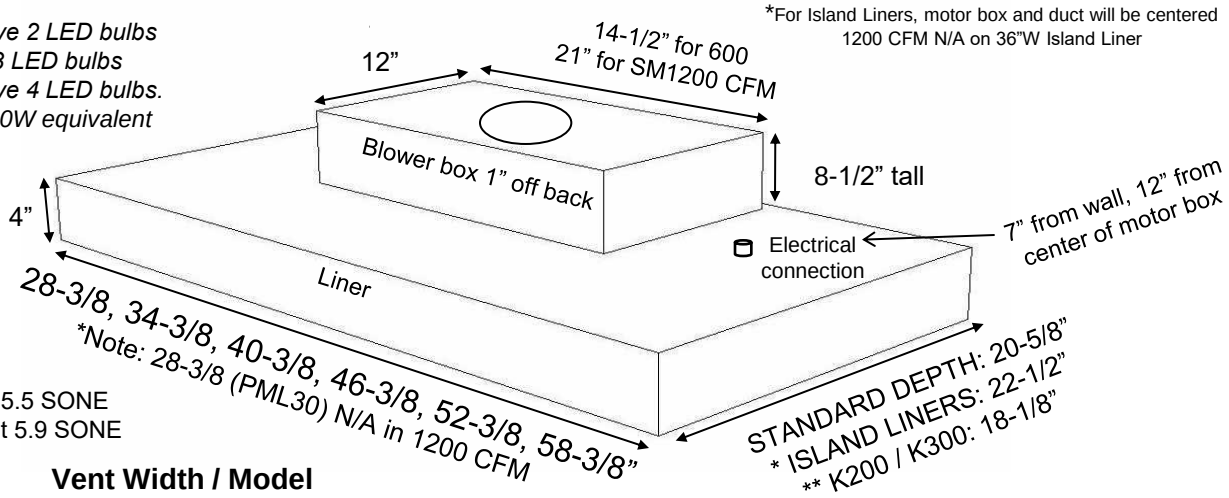

600 is rated at 5.5 SONE
1200 is rated at 5.9 SONE

Vent Width / Model

WOOD HOOD MODEL & SIZE	28-3/8” PML-30	34-3/8” PML-36	40-3/8” PML-42	46-3/8” PML-48	52-3/8” PML-54	58-3/8” PML-60
C,CX, E200, E300, ER200, ER300, ER400, ER500, ER600, FX200, FX300, K200**, K300**, L2, SB100	30	36	42	48	54	60
I – ISLAND (36 N/A w/1200 CFM)	N/A	36	42	48	54	60
B, D, E, G, GT	N/A	36	42	48	54	60
W	N/A	N/A	N/A	66	72	78, 84, 90
H, L, N	48	54	60	66	72	78
BXD, BX, BXV, M, Q, X	30	36	42	48	54	60
A, J, P, S, Z200	33 or 36	39 or 42	45 or 48	51 or 54	57 or 60	63
H2	42	48	54	60	66	72
AX, VX	31	37	43	49	55	61

700 South Glaspie Street • Oxford, MI 48371 • (248) 572-6880 • email: sales@wood-hood.com • www.wood-hood.com

Copyright Stanisci Design 2026 rights reserved

STANISCI DESIGN

PBL Ventilation

Professional Baffle Liner (PBL)

Professional Baffle Liners

Technical Features:

- Dimmer controlled LED lighting
- Variable speed fan control
- Large dishwasher safe brushed stainless steel baffle filters
- Large capture area
- Several blower combinations available
- Liner sizes available from 30” – 60”
- 22 gauge Stainless Steel

Charcoal Pads available for recirculating applications (air must be directed out of hood to maintain warranties).

Stanisci Design ventilation has been engineered specifically for Stanisci Design Range Hoods, and are in-stock and ready to ship!

Features your customers want:

- Dishwasher safe filters
- Easy cleaning
- Dimmer controlled LED lighting
- European design
- Three year in home warranty
- Quiet, variable speed blower- made in Germany

MADE IN U. S. A.

700 South Glaspie Street • Oxford, MI 48371 • (248) 572-6880 • email: sales@wood-hood.com • www.wood-hood.com

Copyright 2026 Stanisci Design all rights reserved

PBL Ventilation

Professional Baffle Liner (PBL)

SM600/300 PBL-600/300-XX	600 CFM motor *comes with optional wire harness to reduce max CFM to 300
DUCTING	8” ROUND
AMPS	110V - 15 amp dedicated circuit
PBL-600/300-30: 28-3/8 W x 20-5/8 D PBL-600/300-36: 34-3/8 W x 20-5/8 D PBL-600/300-42: 40-3/8 W x 20-5/8 D PBL-600/300-48: 46-3/8 W x 20-5/8 D PBL-600/300-54: 52-3/8 W x 20-5/8 D PBL-600/300-60: 58-3/8 W x 20-5/8 D	

SM1200 PBL-1200-XX	1200 CFM motor
DUCTING	10” ROUND
AMPS	110V - 15 amp dedicated circuit
NOT AVAILABLE IN 30” WIDE PBL-1200-36: 34-3/8 W x 20-5/8 D PBL-1200-42: 40-3/8 W x 20-5/8 D PBL-1200-48: 46-3/8 W x 20-5/8 D PBL-1200-54: 52-3/8 W x 20-5/8 D PBL-1200-60: 58-3/8 W x 20-5/8 D	

30-42” liners have 2 LED bulbs
48” liners have 3 LED bulbs
54-60” liners have 4 LED bulbs.
LED BULBS – 50W equivalent

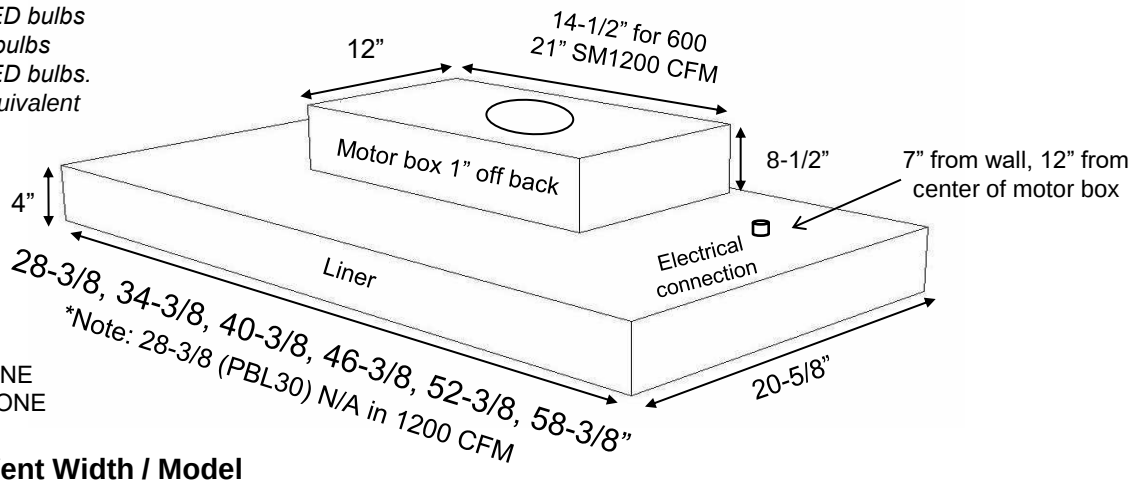

600 is rated at 5.5 SONE
1200 is rated at 5.9 SONE

Vent Width / Model

WOOD HOOD MODEL & SIZE	28-3/8” PBL-30	34-3/8” PBL-36	40-3/8” PBL-42	46-3/8” PBL-48	52-3/8” PBL-54	58-3/8” PBL-60
C,CX, E200, E300, ER200, ER300, ER400, ER500, ER600, FX200, FX300, L2, SB100	30	36	42	48	54	60
B, D, E, G, GT	N/A	36	42	48	54	60
W	N/A	N/A	N/A	66	72	78, 84, 60
H, L, N	48	54	60	66	72	78
BXD, BX, BXV, M, Q, X	30	36	42	48	54	60
A, J, P, S, Z200	33 or 36	39 or 42	45 or 48	51 or 54	57 or 60	63
H2	42	48	54	60	66	72
AX, VX	31	37	43	49	55	61

700 South Glaspie Street • Oxford, MI 48371 • (248) 572-6880 • email: sales@wood-hood.com • www.wood-hood.com

Copyright Stanisci Design 2026 rights reserved

Ductwork Installation

PML, PBL, and SS-BASE

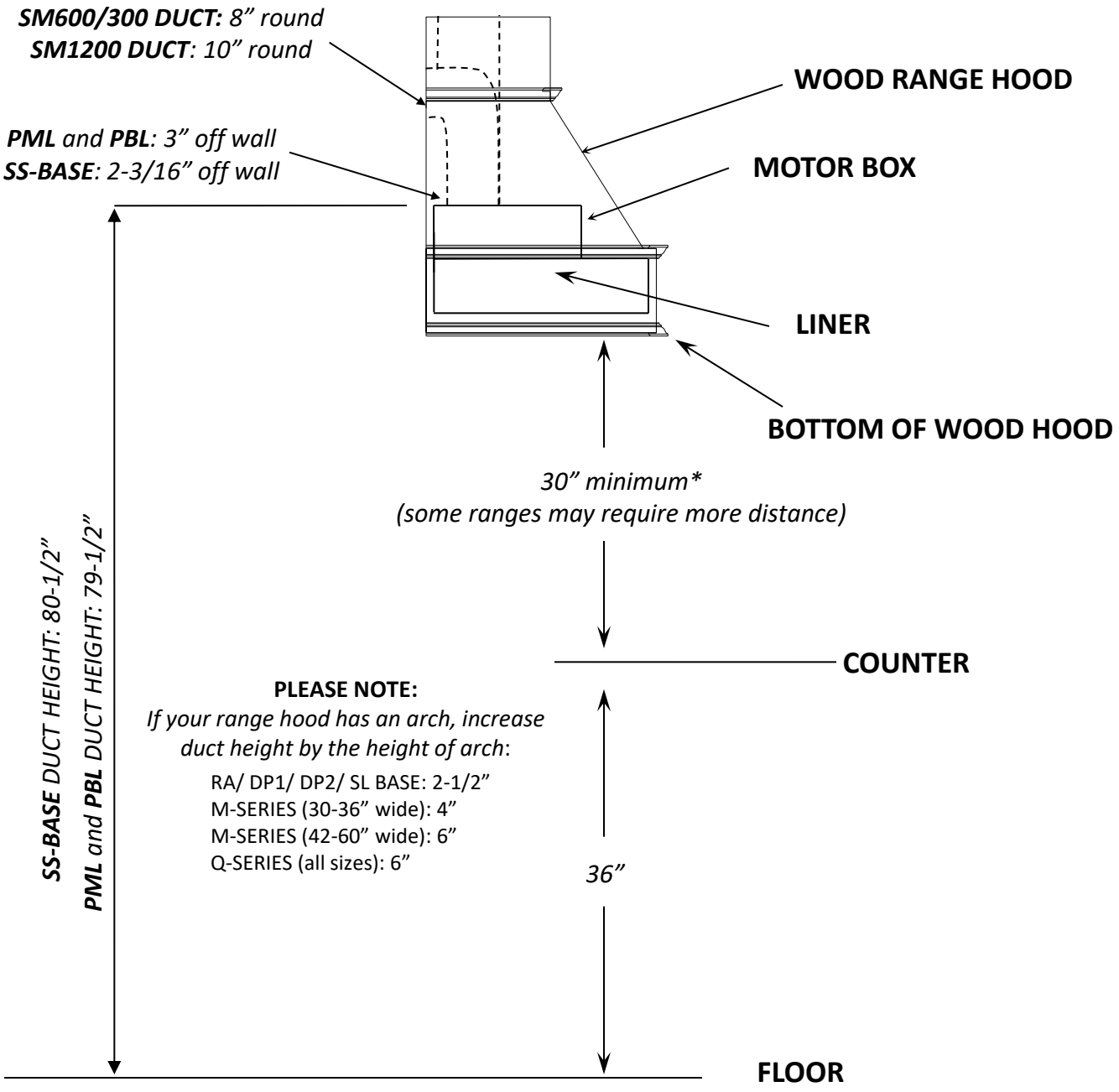

Please note some cooktops require the range hood to be mounted higher than 30”, see manufacturers specifications

700 South Glaspie Street • Oxford, MI 48371 • (248) 572-6880 • email: sales@wood-hood.com • www.wood-hood.com

Copyright Stanisci Design 2026 rights reserved

This page left intentionally blank

Copyright 2026 Stanisci Design all rights reserved

STANISCI DESIGN

IPL Ventilation

Imperial Premium Liners (IPL)

Imperial Premium Liners

- Dimmer controlled LED lighting
- Variable speed fan control
- Stainless Steel design w/ large, easy to clean aluminum mesh filters
- Large capture area
- 2 Internal motor combinations
- Sizes to fit 36” through 48” decorative range hoods
- Temperature-controlled auto-on feature

Stanisci Design ventilation has been engineered specifically for Stanisci Design Range Hoods, and are in-stock and ready to ship!

Features your customers want:

- Easy to clean filters
- Quiet, variable speed, single or dual blowers
- Dimmer controlled 5 Watt LED lighting, comparable to 50 Watt Halogen
- Temperature-controlled auto-on feature
- Three year in home warranty.

MADE IN U. S. A.

NOT APPROVED FOR USE IN CANADA

700 South Glaspie Street • Oxford, MI 48371 • (248) 572-6880 • email: sales@wood-hood.com • www.wood-hood.com

Copyright 2026 Stanisci Design all rights reserved

IPL Ventilation

Imperial Premium Liners (IPL)

635 IPL-635-XX	**635 CFM motor**
DUCTING	7” ROUND (4.25” off center)
AMPS	110V - 15 amp dedicated circuit
IPL-635-36: IPL-635-42:	34-3/8 W x 20-5/8 D 40-3/8 W x 20-5/8 D

990 IPL-990-XX	**990 CFM motor**
DUCTING	10” ROUND
AMPS	110V - 15 amp dedicated circuit
IPL-990-36: IPL-990-42: IPL-990-48:	34-3/8 W x 20-5/8 D 40-3/8 W x 20-5/8 D 46-3/8 W x 20-5/8 D

Duct is offset 4-3/8” left. One or more adjustable 7” elbows may be needed to exit center of hood.

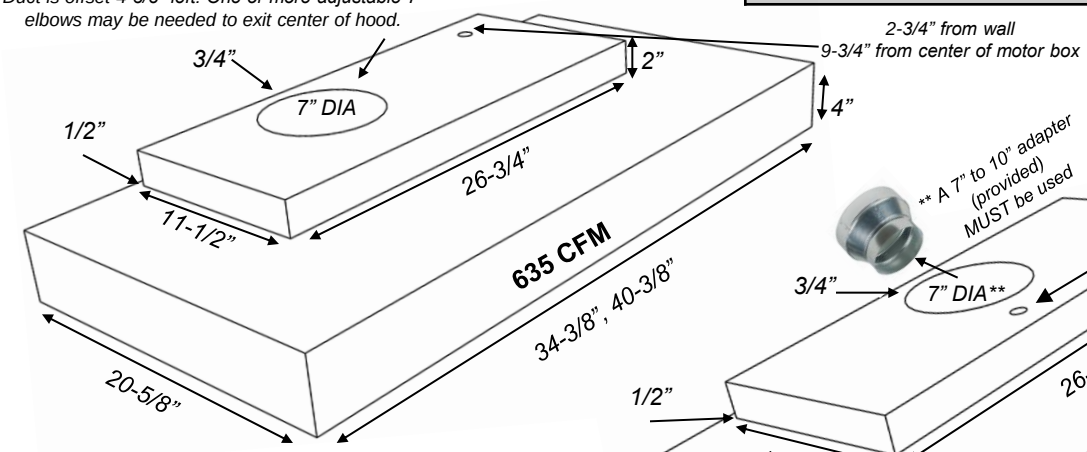

2-3/4” from wall
9-3/4” from center of motor box

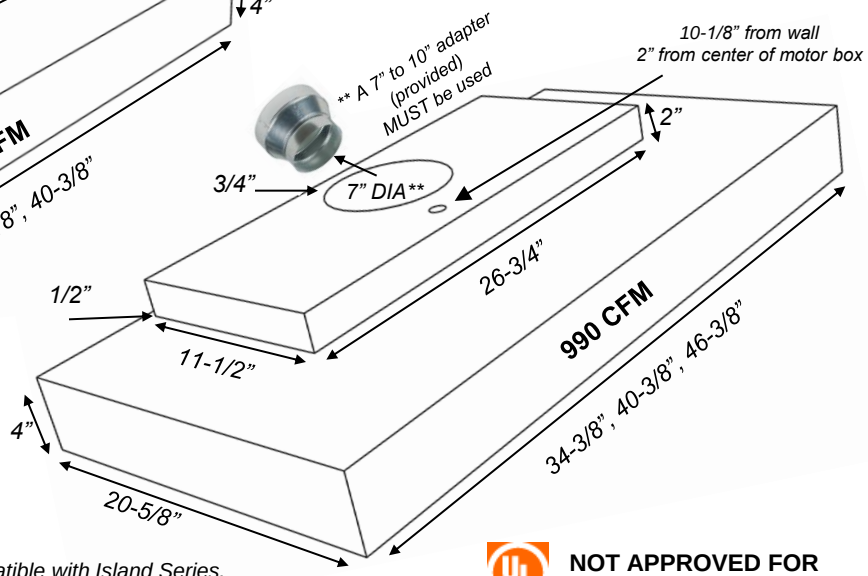

10-1/8” from wall
2” from center of motor box

IPL 635 & 990 are rated at 4.6 SONE

36-48” liners have 2 LED bulbs
LED BULBS – 50W equivalent

IPL liners are not compatible with Island Series.

NOT APPROVED FOR USE IN CANADA

Wood Hood Model and Size	28-3/8”	34-3/8” IPL-36	40-3/8” IPL-42	46-3/8” IPL-48
C, CX, E200, E300, ER200, ER300, ER400, ER500, ER600, FX200, FX300, L2, SB100	N/A	36	42	48
B, D, E, G, GT	N/A	36	42	48
W	N/A	N/A	NA	66
H, L, N	48	54	60	66
BXD, BX, BXV, M, Q, X	N/A	36	42	48
A, J, P, S, Z200	N/A	39 or 42	45 or 48	51 or 54
H2	N/A	48	54	60
AX, VX	N/A	37	43	49

700 South Glaspie Street • Oxford, MI 48371 • (248) 572-6880 • email: sales@wood-hood.com • www.wood-hood.com

Copyright Stanisci Design 2026 rights reserved

STANISCI DESIGN

ISL Ventilation

Imperial Standard Liners (ISL)

Imperial Standard Liners

- LED lighting
- Two speed fan control
- Large capture area
- Single 360 CFM Air Ring Fan
- Liner sizes 30” and 36”
- Stainless Steel design w/ large, easy to clean aluminum mesh filters

Stanisci Design ventilation has been engineered specifically for Stanisci Design Range Hoods, and are in-stock and ready to ship!

Features your customers want:

- Easy to clean filters
- Two speed fan control
- Single- 5 Watt LED, comparable to 50 Watt Halogen with Hi-Lo switch
- Three year in home warranty
- Axial Fan

MADE IN U. S. A.

NOT APPROVED FOR USE IN CANADA

700 South Glaspie Street • Oxford, MI 48371 • (248) 572-6880 • email: sales@wood-hood.com • www.wood-hood.com

Copyright 2026 Stanisci Design all rights reserved

ISL Ventilation

Imperial Standard Liners (ISL)

360 ISL-360-XX	**360 CFM motor**
DUCTING	7” ROUND
AMPS	110V - 15 amp dedicated circuit
ISL-360-30: ISL-360-36:	28-3/8 W x 20-5/8 D 34-3/8 W x 20-5/8 D

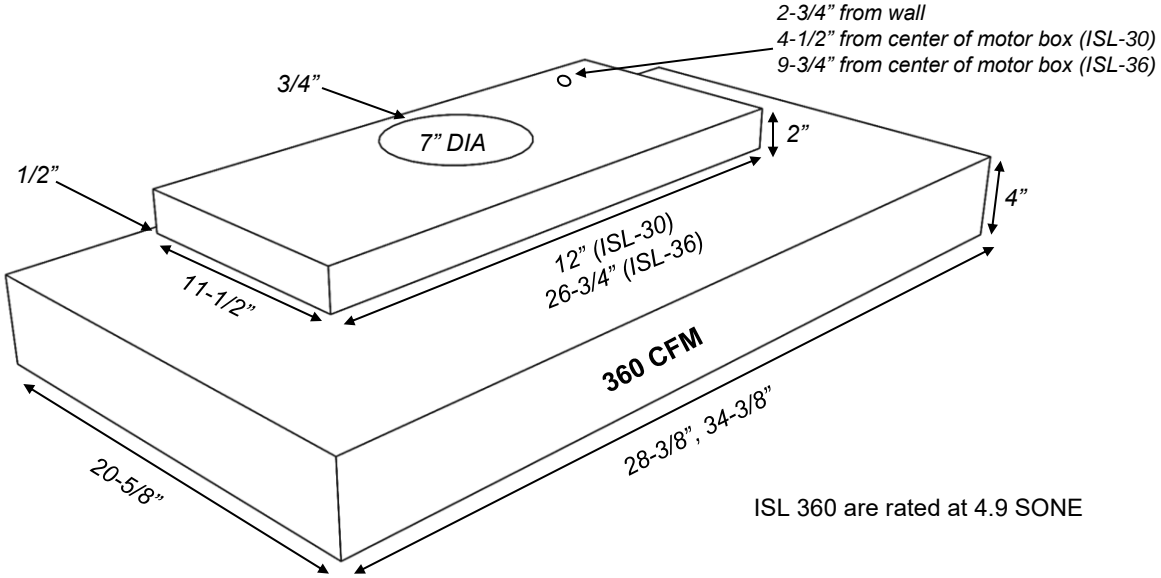

ISL 360 are rated at 4.9 SONE

30” and 36” liners have 1 LED bulb
LED BULBS – 50W equivalent

ISL liners are not compatible with Island Series.

Wood Hood Model and Size	28-3/8” ISL-30	34-3/8” ISL-36
C, CX, E200, E300, ER200, ER300, ER400, ER500, ER600, FX200, FX300, L2, SB100	30	36
B, D, E, G, GT	N/A	36
W	N/A	N/A
H, L, N	48	54
BXD, BX, BXV, M, Q, X	30	36
A, J, P, S, Z200	33 or 36	39 or 42
H2	42	48
AX, VX	31	37

PLEASE NOTE: *Cleaning filter in a dishwashe may cause discoloration. A degreaser (409, Simple Green…) in a sink is recommended.*

NOT APPROVED FOR USE IN CANADA

700 South Glaspie Street • Oxford, MI 48371 • (248) 572-6880 • email: sales@wood-hood.com • www.wood-hood.com

Copyright Stanisci Design 2026 rights reserved

Ductwork Installation

ISL-360, IPL-635, and IPL-990

ISL-360 and IPL-635 DUCT: *7" round*
IPL-990 DUCT*: 10" round (must use 7" to 10" transition piece)*

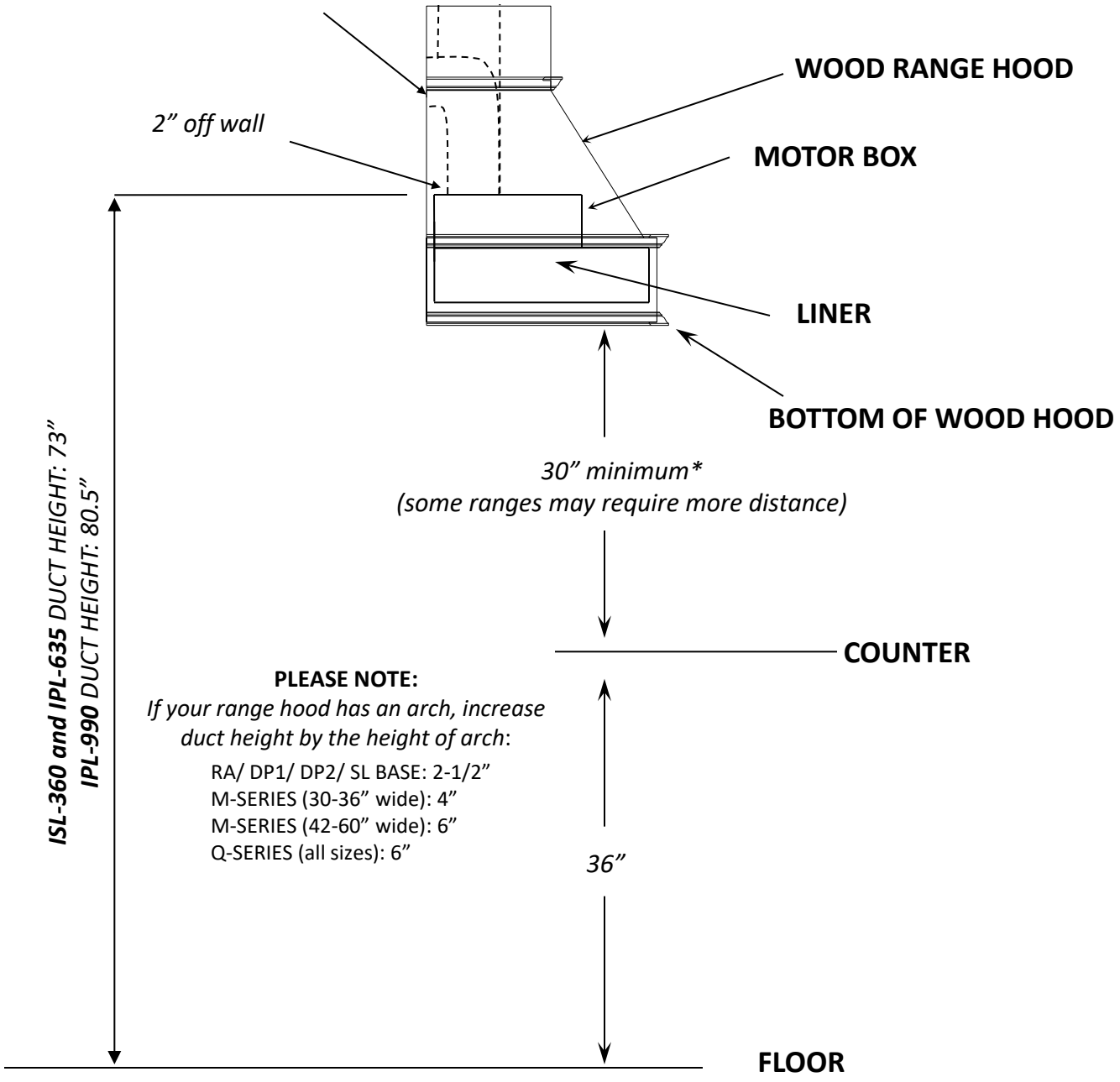

**Please note some cooktops require the range hood to be mounted higher than 30", see manufacturers specifications*

700 South Glaspie Street • Oxford, MI 48371 • (248) 572-6880 • email: sales@wood-hood.com • www.wood-hood.com

Copyright Stanisci Design 2026 rights reserved

Ventilation fundamentals:

Length and width
No range hood on the market is completely effective unless it covers the heat source completely. Wall mounted hoods should extend at least to the front of the cooktop and on a standard cooktop, cover the entire cooktop from left to right. When using a residential commercial cooktop, the hood should overextend the cooktop a minimum of 3” on both the left and right side if possible.

Height
The bottom of the hood should be 30” from the cooking surface. It generally provides the most effective and attractive-looking installation. Some cooking appliance manufacturers require wood range hoods to be mounted higher. Please install according to the cooking appliance manufacturers recommendation.

In situations where ducting has several elbows or runs long distances, it is recommended to step up to the next larger blower size.

Internal Motors

Internal blowers are mounted inside the wood hood above the metal liner. They push the air through the duct.

Note: Externally mounted blowers are mounted outside the home typically on the roof or an exterior wall. We do not sell externally mounted blowers

System Noise
Noise is created in ventilation by air movement. Disrupting air flow with ducting turns increase noise. To minimize noise, run the ducting as straight as possible. The swirling of air within the blower unit also creates noise.

Back draft prevention:
Stanisci Design liners do not contain back draft dampers. If the cold or hot air has made its way to the range hood the kitchen will be affected. We recommend wall or roof caps with spring loaded dampers. We do not stock these, however they are readily available in the market.

Copyright Stanisci Design 2026 rights reserved

REMOVABLE TOP (RT)

Base of the hood will be installed first with the ventilation. After all hook ups are complete – the chimney top will be attached. You will need a minimum of 3/4” clearance to lower chimney on guides. Cutting or trimming of parts in field will void warranty and compromise structural integrity.

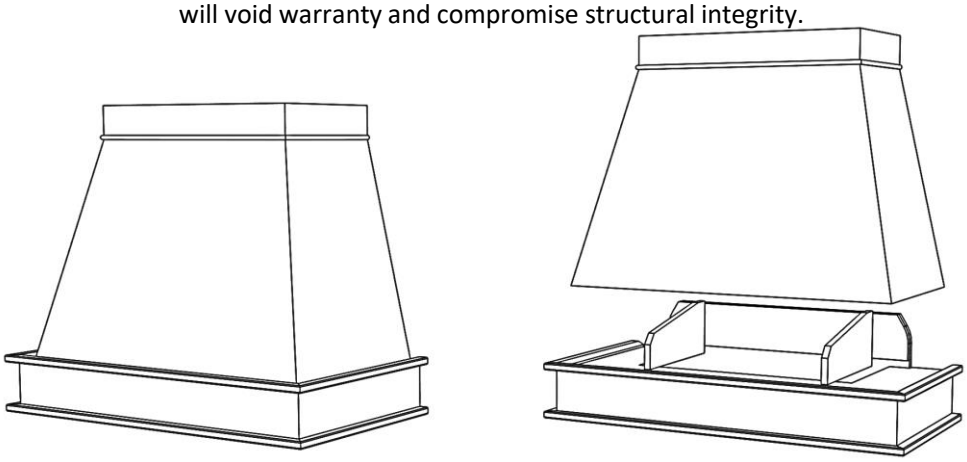

AVAILABLE ON THESE MODELS: B, BXDHW, BXHW, BXVHW, C, CX, E, E200, FX200, G, GT

REMOVABLE FRONT (RF)

Entire front section lifts straight up 3/4" and removes. Vent is easily installed, then front section is reattached. The rear cabinet box will be 16” deep (14” for J- Series). There is a 5/16" reveal on the front frame to box (adds 5/8” to overall width of front section only) . A minimum 3/4“ vertical clearance is needed between hood top and ceiling so that you can slide onto guides. Cutting or trimming of parts in field will void warranty and compromise structural integrity.

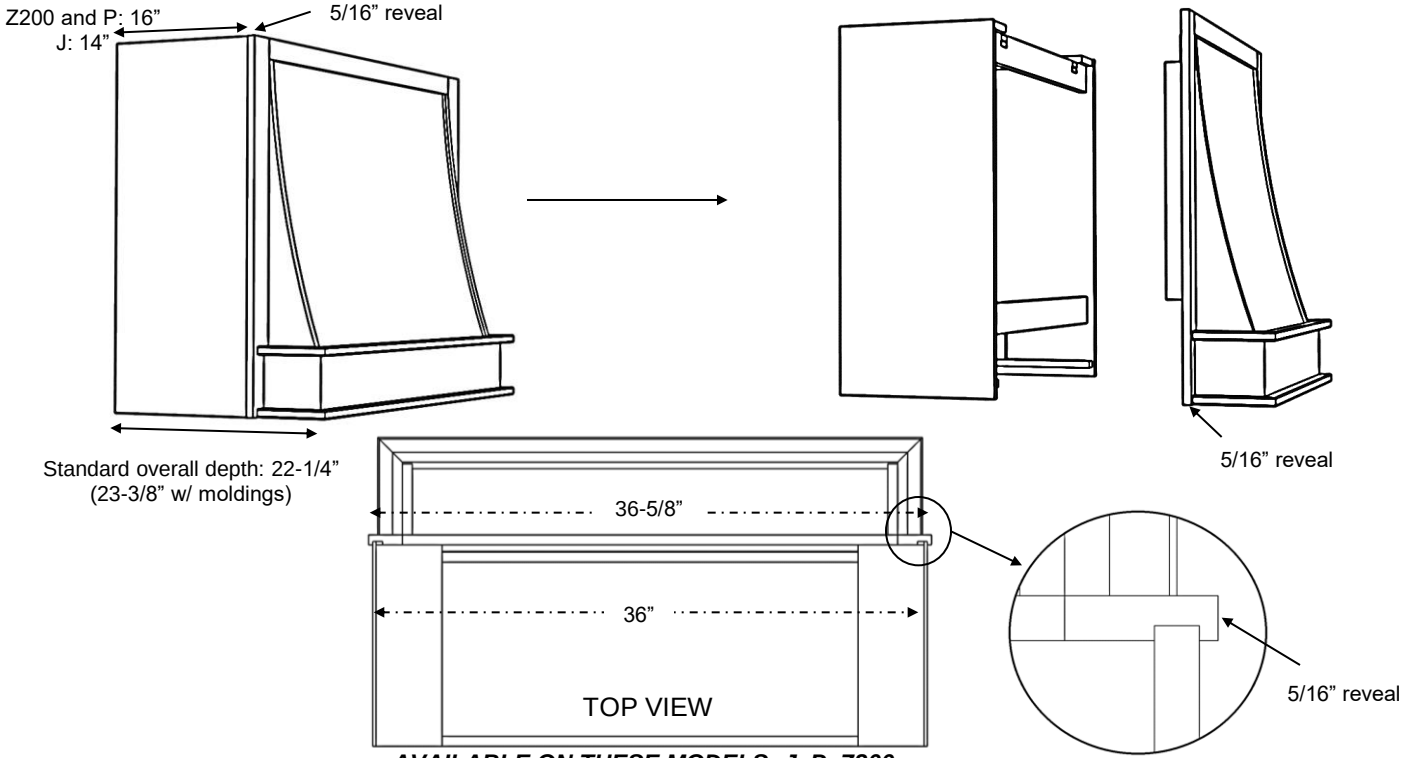

AVAILABLE ON THESE MODELS: J, P, Z200

Copyright 2026 Stanisci Design all rights reserved

MODIFIED REMOVABLE PANEL (MRP)

Door panel is removable, and attaches with clips. Panel extends the full height of hood, and the lower seam is hidden behind a shelf. Crown can be laid on top of door once vent hook-ups are made.

STANDARD MRP
no fixed top rail, panel extends full height of hood.

AVAILABLE BY CUSTOM REQUEST
2" fixed top, 4" total top rail.

ORDER: MRP-2TR

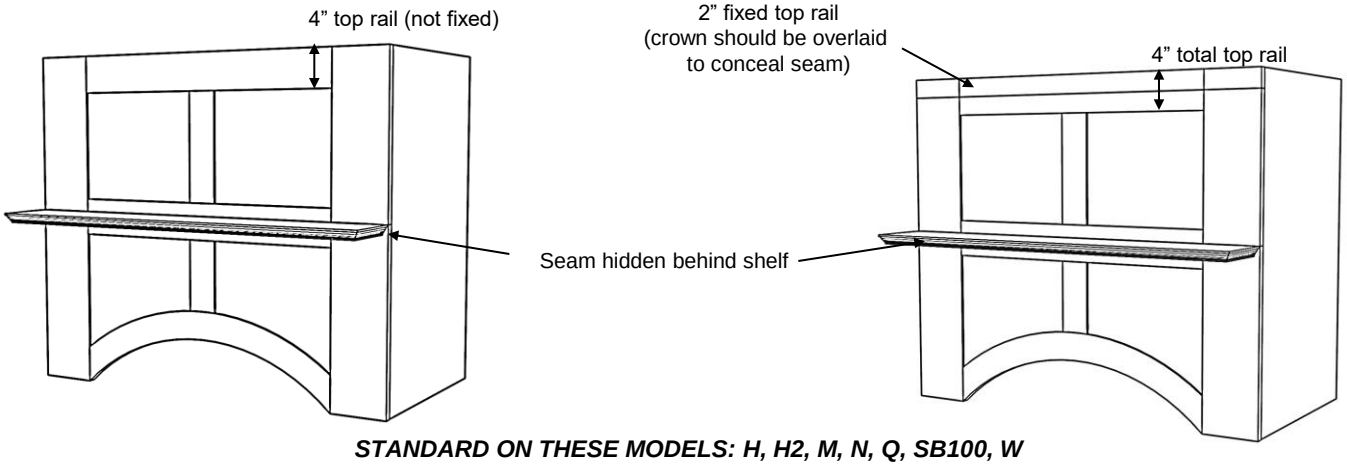

STANDARD ON THESE MODELS: H, H2, M, N, Q, SB100, W

APPLIED REMOVABLE PANEL (ARP)

An access panel is cut into the face of the hood , and decorative molding is applied to cover the seam.

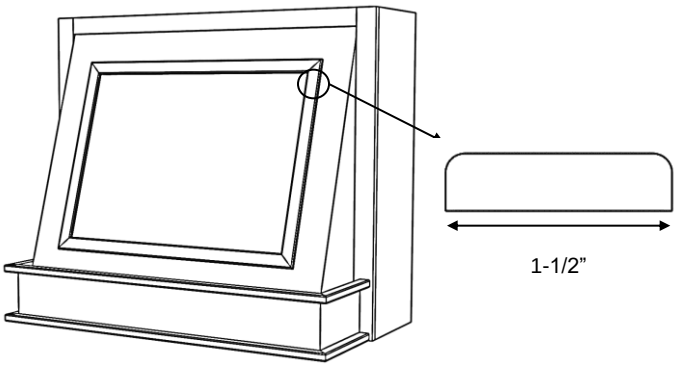

Basic batten style molding is standard.
ARP

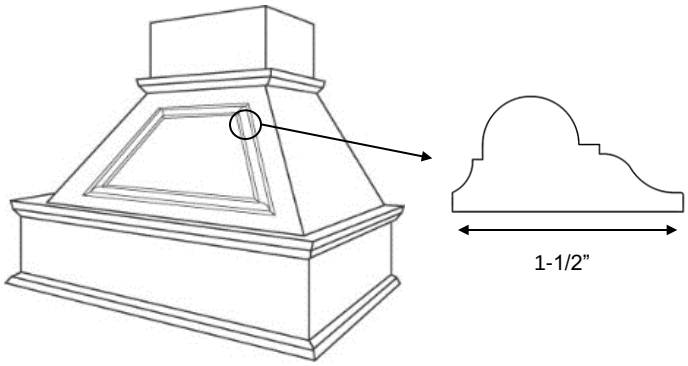

Decorative molding style available by request.
ARP-D

AVAILABLE ON THESE MODELS: C, CX, G, GT, I, J, P

Copyright 2026 Stanisci Design all rights reserved

STANDARD REMOVABLE DOOR PANEL

A door panel is applied onto the face of the hood, and is removable.

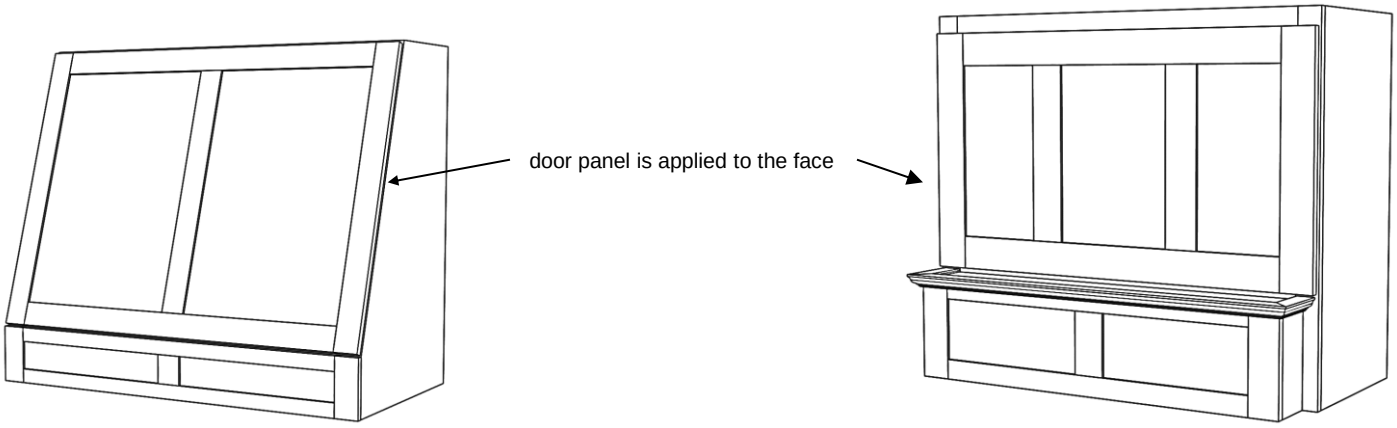

STANDARD ON THESE MODELS: FX300, L2, S*

On all S-Series models, door removes by pulling upwards. Minimum 1/2" clearance is needed above top of door.

BEADED ACCESS - CONCEALED

Decorative beading conceals 2 seams for the removable panel, secured by clips.

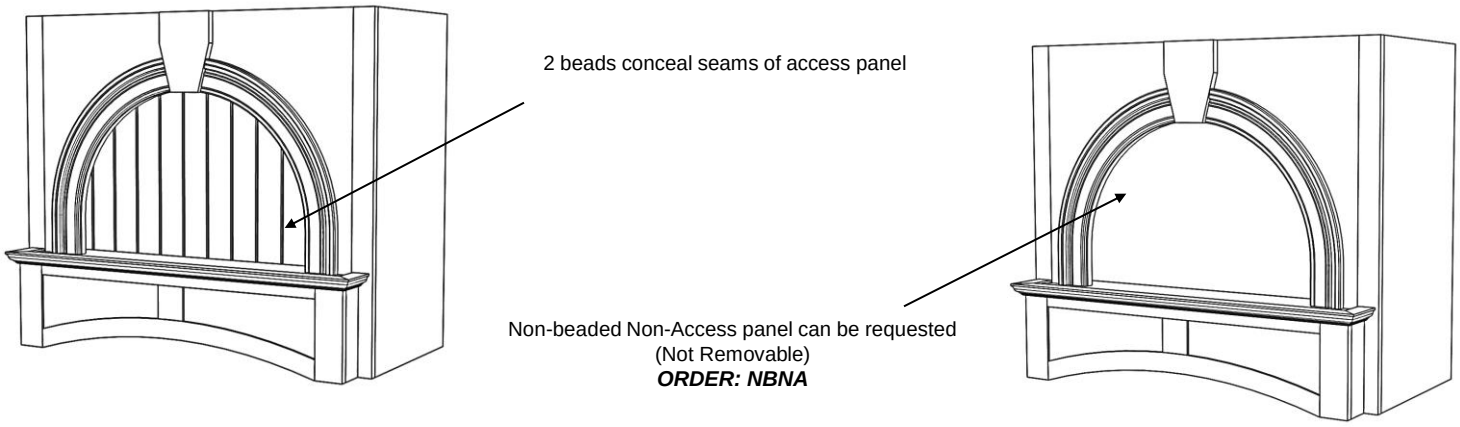

STANDARD ON THESE MODELS: A, L

Copyright 2026 Stanisci Design all rights reserved

CURVED BATTENS

Curved Hardwood Battens are available in all of our standard species.

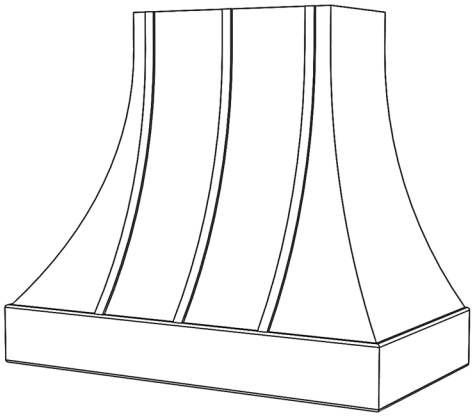

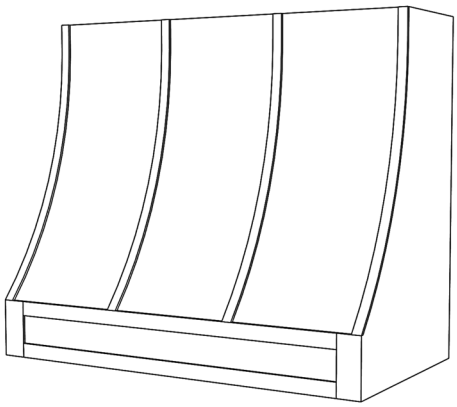

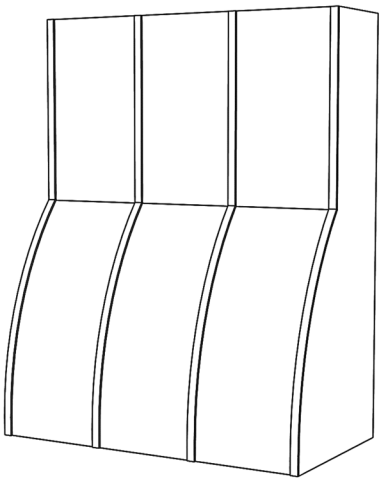

AVAILABLE ON E-SERIES

36" wide: 2 on face
42" and 48" wide: 3 on face
54" and 60" wide: 4 on face
** side battens available by request*

AVAILABLE ON E200, E300, ER200, ER300, ER400, ER500, ER600

30" – 48" wide: 4 battens on face
54" and 60" wide: 5 battens on face

Straight Battens

Vertical Hardwood Battens are available in all of our standard species.

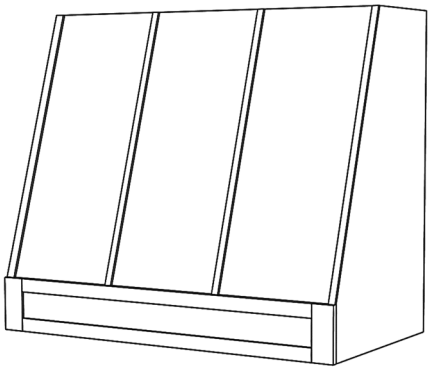

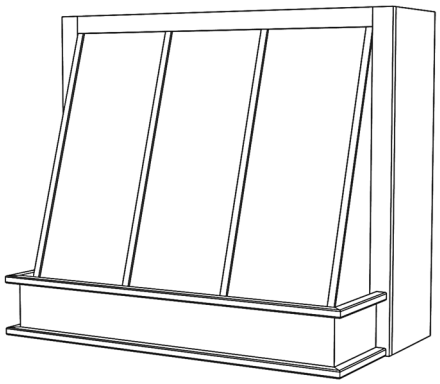

30" – 48" wide: 4 battens on face
Over 48" wide: 5 battens on face

AVAILABLE ON THESE MODELS: FX200, FX300, P

Copyright Stanisci Design 2026 rights reserved

Applied Hardwood Wrap

A 6" high hardwood wrap can be applied along the bottom of an In-Series hood to create the visual appearance of a separate base section. The wrap is shipped loose, and can be trimmed in-field to desired depth so sides remain flush for cabinet installation. This wrap can be applied in a different species than the hood to create a two-tone design.

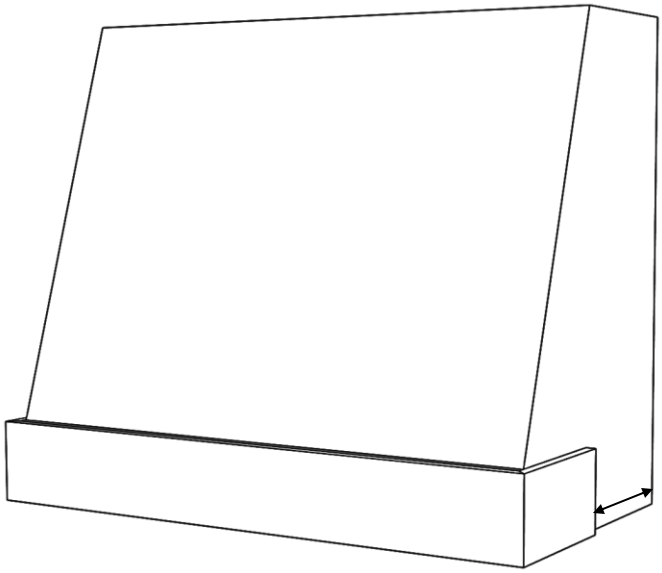

****Please consider door swings and clearances. Your cabinet design may require fillers or extended stiles****

Hardwood wrap will ship loose, and cut to full depth of hood. Can be trimmed in field to your desired depth.

AVAILABLE ON THESE MODELS: BX, BXV, E300, FX300, L2

Applied Molding Wrap

Basic style moldings can be applied along the top and bottom trim of the base panel and sides of In-Series hoods to create the visual appearance of a separate base section. Moldings are shipped loose, and can be trimmed infield to desired depth so sides remain flush for cabinet installation.

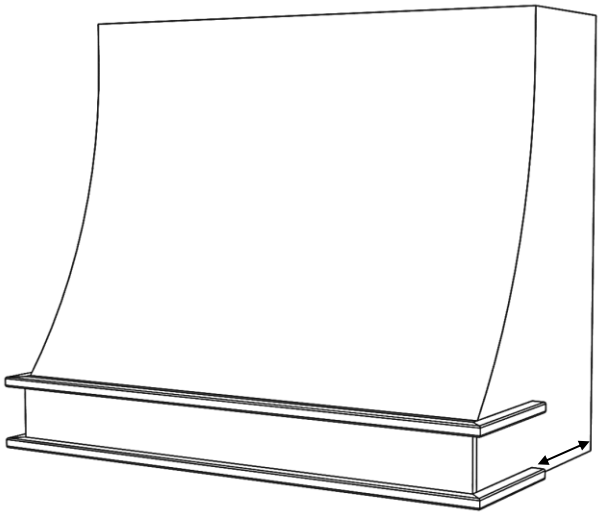

****Please consider door swings and clearances. Your cabinet design may require fillers or extended stiles****

Molding wrap will ship loose, and cut to full depth of hood. Can be trimmed in field to your desired depth.

AVAILABLE ON THESE MODELS: BX, BXV, E300, FX300, L2

700 South Glaspie Street • Oxford, MI 48371 • (248) 572-6880 • email: sales@wood-hood.com • www.wood-hood.com

Copyright Stanisci Design 2026 rights reserved

This page left intentionally blank

Copyright 2026 Stanisci Design all rights reserved

Anvil™ Finishing Program
BY GROTHOUSE

AVAILABLE IN 8 STANDARD METAL FINISHES

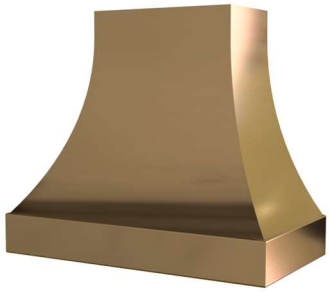

EHW

*Representation shown of hood with Anvil™ Metal finish (Axel)

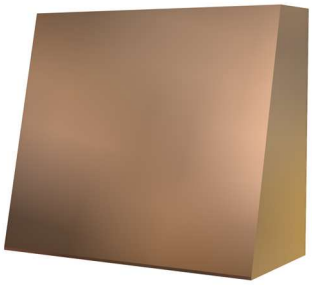

K300

*Representation shown of hood with Anvil™ Metal finish (Exodus)

BXHW

*Representation shown of grey painted hood with Hardwood Base Section in Anvil™ Metal finish (Ferrum)

Grothouse – Anvil™ Finish Program

Stanisci Design is partnering with Grothouse to bring their exclusive Anvil™ Finish Program to Stanisci Range Hoods and Accent Pieces.

The Anvil™ Metal coatings are exclusively available at Grothouse. They use a proprietary finish using real metals in copper, brass, steel, and more that are liquified and sprayed onto our wood hood, moldings, and decorative accent pieces. All finishing takes place at their headquarters in Germansville, PA.

The Anvil™ Finish program allows for elevated metallic design features that previously were unable to be crafted with solid metal. This will provide expansive design options and aggressive cost savings to comparable full metal hoods available in the marketplace. We also provide wood moldings that can be finished and applied as metal accent pieces including battens, applied hardwood and molding wraps. The wood moldings and accent pieces can be cut and installed like any traditional wood molding. These pieces are shipped from the factory, backed with an aggressive 3M backer tape to ensure trouble free adhesion to your wood hood once finished.

ANVIL FINISHING FOR YOUR STANISCI RANGE HOOD *(8-10 WEEK LEAD TIME)*

AVAILABLE ON THESE MODELS

AX, B, BXD, BX, BXV, C, CX, D, E, E200, E300, ER200, ER300, ER400, ER500, ER600, FX200, FX300, G, GT, J, K200, K300, P, Z200, OR HARDWOOD BASE ONLY ON ANY HW-SERIES

HOW DOES IT WORK?

*YOUR RANGE HOOD AND ANVIL™ FINISH ORDER WILL BE DONE DIRECTLY WITH STANISCI DESIGN. ONCE YOUR HOOD HAS FINISHED PRODUCTION, STANISCI WILL HAVE IT SENT TO GROTHOUSE FOR FINSIHING, AND THEN TO YOU ONCE COMPLETE. *ALL ADDITIONAL SHIPPING COSTS FROM GROTHOUSE TO YOU ARE ALREADY INCLUDED IN THE COST OF FINISHING.*

ANVIL FINISHING FOR DECORATIVE ACCENT PIECES (*4-6 WEEK LEAD TIME)*

AVAILABLE ON THESE DECORATIVE PIECES

CURVED BATTENS, STRAIGHT BATTENS, APPLIED HARDWOOD WRAPS, AND APPLIED MOLDING WRAPS

HOW DOES IT WORK?

YOUR ORDER AND FINISH REQUEST WILL BE DONE DIRECTLY WITH STANISCI DESIGN. THE RANGE HOOD WILL SHIP TO YOU IN THE STANDARD LEAD TIME, AND THE DECOATIVE ACCENTS W/ ANVIL™ METAL FINISH WILL SHIP TO YOU SEPARATELY IN APPROX 4-6 WEEKS AND HAVE AN AGGRESSIVE 3M BACKING TO ALLOW EASY AND SECURE FIELD INSTALLATION & ADHESION.

700 South Glaspie Street • Oxford, MI 48371 • (248) 572-6880 • email: sales@wood-hood.com • www.wood-hood.com

Copyright Stanisci Design 2026 all rights reserved

STANISCI DESIGN

Anvil™ Finishing Program
BY GROTHOUSE

AVAILABLE IN 8 STANDARD METAL FINISHES

Anvil™ metal coatings are available in 4 smooth metallic color choices, and those same 4 finishes in a Cast version of the color. The Cast version of the color will provide a textured, vintage and antique look on the finish. All Anvil™ metal finishes will receive an overcoat of Grothouse Durata® clear finish to maintain the original metal finish.

AVAILABLE ANVIL™ METAL FINISHES

AXEL (POLISH)

AXEL (CAST)

EXODUS (POLISH)

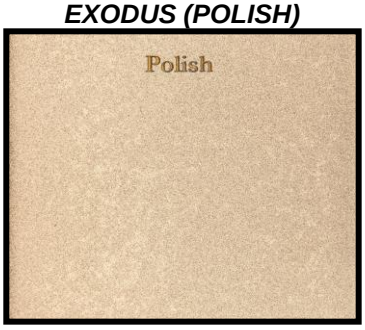

EXODUS (CAST)

FERRUM (POLISH)

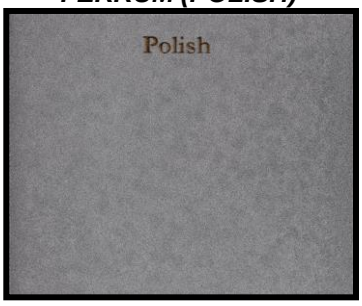

FERRUM (CAST)

MAGNUM (POLISH)

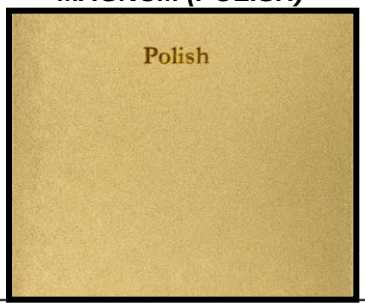

MAGNUM (CAST)

700 South Glaspie Street • Oxford, MI 48371 • (248) 572-6880 • email: sales@wood-hood.com • www.wood-hood.com

Copyright 2026 Stanisci Design all rights reserved

CURVED BATTENS WITH ANVIL™ METAL FINISH

*Representation shown of grey painted hood with Curved Hardwood Battens in Anvil™ Metal finish.

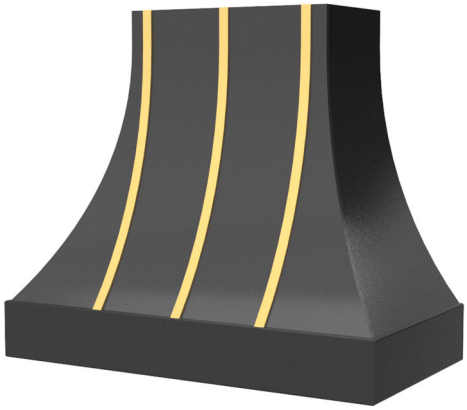

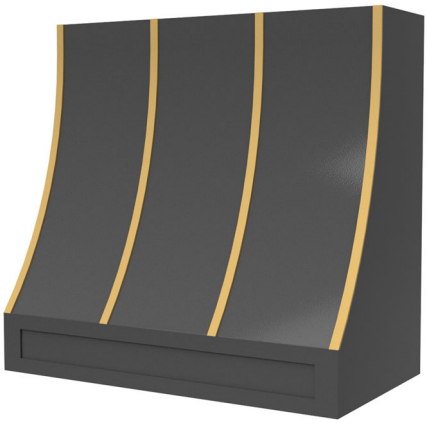

AVAILABLE ON E-SERIES

36" wide: 2 on face
42" and 48" wide: 3 on face
54" and 60" wide: 4 on face
** side battens available by request*

AVAILABLE ON E200, E300, ER200, ER300, ER400, ER500, ER600

30" – 48" wide: 4 battens on face
54" and 60" wide: 5 battens on face

STRAIGHT BATTENS WITH ANVIL™ METAL FINISH

*Representation shown of grey painted hood with Straight Hardwood Battens in Anvil™ Metal finish.

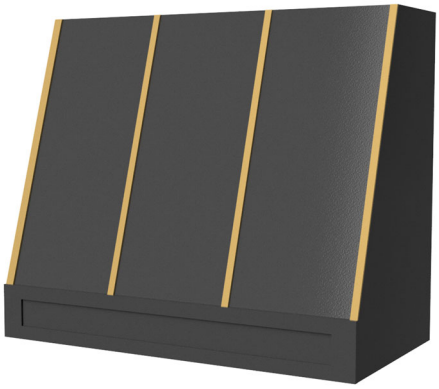

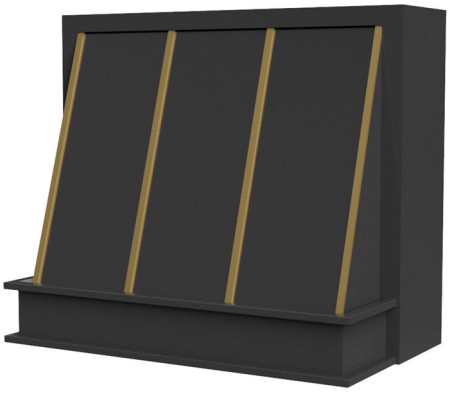

30" – 48" wide: 4 battens on face
Over 48" wide: 5 battens on face

AVAILABLE ON THESE MODELS: FX200, FX300, P

Copyright Stanisci Design 2026 rights reserved

MODIFICATIONS

Hardwood and Molding Wraps with Anvil™ Metal Finish for In-Series Hoods

Applied Hardwood Wrap with Anvil™ Metal Finish

A 6" high hardwood wrap with Anvil™ Metal Finish can be applied along the bottom of an In-Series hood to create the visual appearance of a separate metal base section. The wrap is shipped loose, and can be trimmed in-field to desired depth so sides remain flush for cabinet installation. This wrap will be finished and shipped directly from Grothouse.

*Representation shown of grey painted hood with Applied Hardwood Wrap in Anvil™ Metal finish

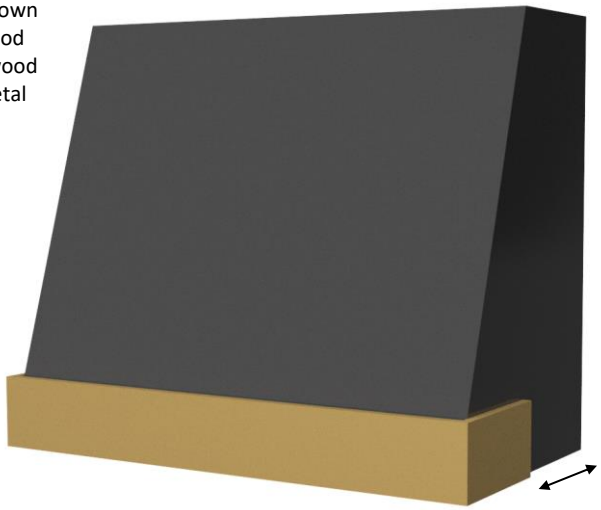

****Please consider door swings and clearances. Your cabinet design may require fillers or extended stiles****

Hardwood wrap will ship loose, and cut to full depth of hood. Can be trimmed in field to your desired depth.

AVAILABLE ON THESE MODELS: BX, BXV, E300, FX300, L2

Applied Molding Wrap with Anvil™ Metal Finish

Basic style moldings with Anvil™ Metal Finish can be applied along the top and bottom trim of the base panel and sides of In-Series hoods to create the visual appearance of a separate metal base section. Moldings are shipped loose, and can be trimmed infield to desired depth so sides remain flush for cabinet installation. These moldings will be finished and shipped directly from Grothouse.

*Representation shown of grey painted hood with Applied Molding Wrap in Anvil™ Metal finish

****Please consider door swings and clearances. Your cabinet design may require fillers or extended stiles****

Molding wrap will ship loose, and cut to full depth of hood. Can be trimmed in field to your desired depth.

AVAILABLE ON THESE MODELS: BX, BXV, E300, FX300, L2

700 South Glaspie Street • Oxford, MI 48371 • (248) 572-6880 • email: sales@wood-hood.com • www.wood-hood.com

Copyright Stanisci Design2026 rights reserved

STANISCI DESIGN

ACCESSORIES

Sorrento Spice Rack Supports

DESIGNED FOR THESE MODELS: H2, N, (AVAILABLE BY REQUEST ON ALL OTHER MODELS)

SECTION A – SIZE

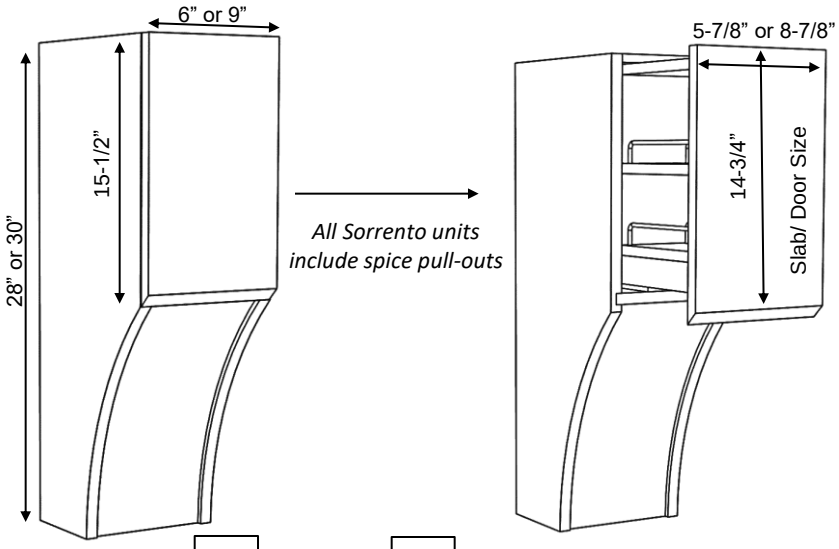

WIDTH
**must select one*

☐ *6”* ☐ *9”*

HEIGHT
**must select one*

☐ *28”* ☐ *30”*

SECTION B – FRONT PANEL

FRONT – SLAB PANEL *FRONT – DOOR PANEL*

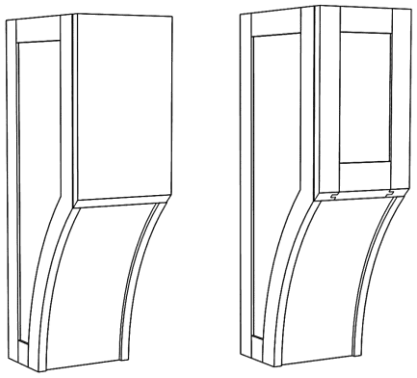

☐ ☐

SECTION C – SIDE CHOICES

BOTH SIDES SLAB

BOTH SIDES DOOR PANEL

LEFT SIDE OF LEG – SLAB
RIGHT SIDE OF LEG – DOOR PANEL
**image shows both sides of 1 leg*

LEFT SIDE OF LEG – DOOR PANEL
RIGHT SIDE OF LEG – SLAB
**image shows both sides of 1 leg*

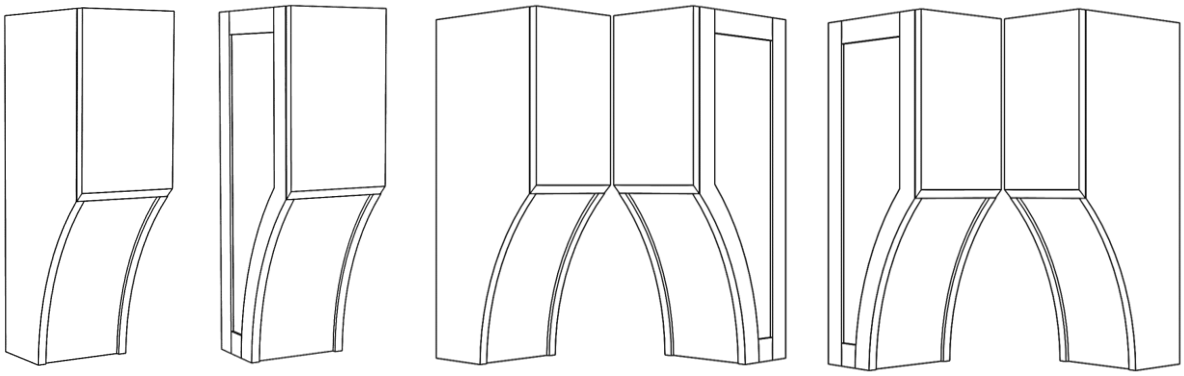

LEFT SORRENTO LEG
**must select one*

☐ ☐ ☐ ☐

RIGHT SORRENTO LEG
**must select one*

☐ ☐ ☐ ☐

700 South Glaspie Street • Oxford, MI 48371 • (248) 572-6880 • email: sales@wood-hood.com • www.wood-hood.com

Copyright Stanisci Design 2026 rights reserved

STANISCI DESIGN

ACCESSORIES

Corbels & Carvings

Providence Shallow	Princeton Wide
CBL-PRS3	*CBL-PRW3*
3” x 4-3/4” x 10-1/2”	*4-1/2” x 4-3/4” x 10-1/2”*
Provincial	**Arts & Crafts**
CBL-PPC3	*CBL-ART3*
5” x 5” x 10”	*5” x 5” x 10”*

Paint Grade, Maple, Red Oak, Cherry and Alder are in stock.
All other species are special-ordered, and increases lead time approx. 1-2 weeks.
(Please note drawings are not to scale, they have been adjusted to fit the page)
DIMENSIONS ARE: Width x Depth x Height

700 South Glaspie Street • Oxford, MI 48371 • (248) 572-6880 • email: sales@wood-hood.com • www.wood-hood.com

Copyright Stanisci Design 2026 rights reserved

STANISCI DESIGN

ACCESSORIES

Corbels & Carvings

Transitional

CBL-TR3

4-3/4” x 5-1/2” x 9-1/2”

Traditional

COR-TT2

4-1/4” x 4-5/8” x 10”

Acanthus

COR-AC2

5” x 5” x 10-1/2”

Acanthus Onlay

ONL-AC24

24” x 3/4” x 5-1/4”

Acanthus Corner Onlays

ONL-ACC3 (sold in pairs)

7-5/8” x 3/4” x 7-5/8”

Paint Grade, Maple, Red Oak, Cherry and Alder are in stock.
All other species are special-ordered, and increases lead time approx. 1-2 weeks.
(Please note drawings are not to scale, they have been adjusted to fit the page)
DIMENSIONS ARE: Width x Depth x Height

700 South Glaspie Street • Oxford, MI 48371 • (248) 572-6880 • email: sales@wood-hood.com • www.wood-hood.com

Copyright Stanisci Design 2026 rights reserved

This page left intentionally blank

Copyright 2026 Stanisci Design all rights reserved